Internal Use Only

North/Latin America	http://aic.lgservice.com
Europe/Africa	http://eic.lgservice.com
Asia/Oceania	http://biz.lgservice.com

LED LCD TV
SERVICE MANUAL

CHASSIS : LT01U

MODEL : 42LV4500 42LV4500-DA

CAUTION
BEFORE SERVICING THE CHASSIS,
READ THE SAFETY PRECAUTIONS IN THIS MANUAL.

P/NO : MFL67011605 (1105-REV00)

Printed in Korea

CONTENTS

CONTENTS 2

PRODUCT SAFETY 3

SPECIFICATION 6

ADJUSTMENT INSTRUCTION 16

EXPLODED VIEW 21

SVC. SHEET .....

Copyright © 2011 LG Electronics. Inc. All right reserved.
Only for training and service purposes

LGE Internal Use Only

SAFETY PRECAUTIONS

IMPORTANT SAFETY NOTICE

Many electrical and mechanical parts in this chassis have special safety-related characteristics. These parts are identified by ⚠ in the Schematic Diagram and Exploded View.
It is essential that these special safety parts should be replaced with the same components as recommended in this manual to prevent Shock, Fire, or other Hazards.
Do not modify the original design without permission of manufacturer.

General Guidance

An **isolation Transformer should always be used** during the servicing of a receiver whose chassis is not isolated from the AC power line. Use a transformer of adequate power rating as this protects the technician from accidents resulting in personal injury from electrical shocks.

It will also protect the receiver and it's components from being damaged by accidental shorts of the circuitry that may be inadvertently introduced during the service operation.

If any fuse (or Fusible Resistor) in this TV receiver is blown, replace it with the specified.

When replacing a high wattage resistor (Oxide Metal Film Resistor, over 1W), keep the resistor 10mm away from PCB.

Keep wires away from high voltage or high temperature parts.

Before returning the receiver to the customer,

always perform an **AC leakage current check** on the exposed metallic parts of the cabinet, such as antennas, terminals, etc., to be sure the set is safe to operate without damage of electrical shock.

Leakage Current Cold Check(Antenna Cold Check)
With the instrument AC plug removed from AC source, connect an electrical jumper across the two AC plug prongs. Place the AC switch in the on position, connect one lead of ohm-meter to the AC plug prongs tied together and touch other ohm-meter lead in turn to each exposed metallic parts such as antenna terminals, phone jacks, etc.
If the exposed metallic part has a return path to the chassis, the measured resistance should be between 1MΩ and 5.2MΩ.
When the exposed metal has no return path to the chassis the reading must be infinite.
An other abnormality exists that must be corrected before the receiver is returned to the customer.

Leakage Current Hot Check (See below Figure)
Plug the AC cord directly into the AC outlet.

Do not use a line Isolation Transformer during this check.
Connect 1.5K/10watt resistor in parallel with a 0.15uF capacitor between a known good earth ground (Water Pipe, Conduit, etc.) and the exposed metallic parts.
Measure the AC voltage across the resistor using AC voltmeter with 1000 ohms/volt or more sensitivity.
Reverse plug the AC cord into the AC outlet and repeat AC voltage measurements for each exposed metallic part. Any voltage measured must not exceed 0.75 volt RMS which is corresponds to 0.5mA.
In case any measurement is out of the limits specified, there is possibility of shock hazard and the set must be checked and repaired before it is returned to the customer.

Leakage Current Hot Check circuit

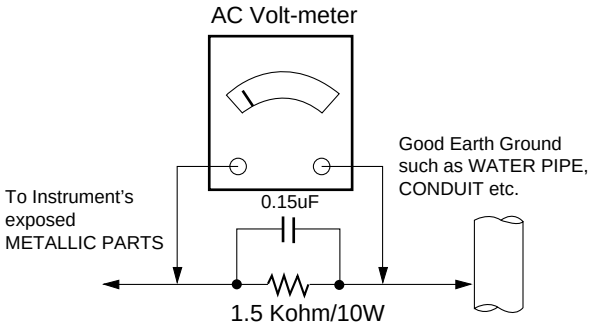

When 25A is impressed between Earth and 2nd Ground for 1 second, Resistance must be less than 0.1 Ω
*Base on Adjustment standard

Copyright © 2011 LG Electronics. Inc. All right reserved.
Only for training and service purposes

LGE Internal Use Only

SERVICING PRECAUTIONS

CAUTION: Before servicing receivers covered by this service manual and its supplements and addenda, read and follow the *SAFETY PRECAUTIONS* on page 3 of this publication.

NOTE: If unforeseen circumstances create conflict between the following servicing precautions and any of the safety precautions on page 3 of this publication, always follow the safety precautions. Remember: Safety First.

General Servicing Precautions

1. Always unplug the receiver AC power cord from the AC power source before;
   a. Removing or reinstalling any component, circuit board module or any other receiver assembly.
   b. Disconnecting or reconnecting any receiver electrical plug or other electrical connection.
   c. Connecting a test substitute in parallel with an electrolytic capacitor in the receiver.
   CAUTION: A wrong part substitution or incorrect polarity installation of electrolytic capacitors may result in an explosion hazard.

2. Test high voltage only by measuring it with an appropriate high voltage meter or other voltage measuring device (DVM, FETVOM, etc) equipped with a suitable high voltage probe.
   Do not test high voltage by "drawing an arc".
3. Do not spray chemicals on or near this receiver or any of its assemblies.
4. Unless specified otherwise in this service manual, clean electrical contacts only by applying the following mixture to the contacts with a pipe cleaner, cotton-tipped stick or comparable non-abrasive applicator; 10% (by volume) Acetone and 90% (by volume) isopropyl alcohol (90%-99% strength)
   CAUTION: This is a flammable mixture.
   Unless specified otherwise in this service manual, lubrication of contacts in not required.
5. Do not defeat any plug/socket B+ voltage interlocks with which receivers covered by this service manual might be equipped.
6. Do not apply AC power to this instrument and/or any of its electrical assemblies unless all solid-state device heat sinks are correctly installed.
7. Always connect the test receiver ground lead to the receiver chassis ground before connecting the test receiver positive lead.
   Always remove the test receiver ground lead last.
8. *Use with this receiver only the test fixtures specified in this service manual.*
   CAUTION: Do not connect the test fixture ground strap to any heat sink in this receiver.

Electrostatically Sensitive (ES) Devices

Some semiconductor (solid-state) devices can be damaged easily by static electricity. Such components commonly are called *Electrostatically Sensitive (ES) Devices.* Examples of typical ES devices are integrated circuits and some field-effect transistors and semiconductor "chip" components. The following techniques should be used to help reduce the incidence of component damage caused by static by static electricity.

1. Immediately before handling any semiconductor component or semiconductor-equipped assembly, drain off any electrostatic charge on your body by touching a known earth ground. Alternatively, obtain and wear a commercially available discharging wrist strap device, which should be removed to prevent potential shock reasons prior to applying power to the unit under test.
2. After removing an electrical assembly equipped with ES devices, place the assembly on a conductive surface such as aluminum foil, to prevent electrostatic charge buildup or exposure of the assembly.
3. Use only a grounded-tip soldering iron to solder or unsolder ES devices.
4. Use only an anti-static type solder removal device. Some solder removal devices not classified as "anti-static" can generate electrical charges sufficient to damage ES devices.
5. Do not use freon-propelled chemicals. These can generate electrical charges sufficient to damage ES devices.
6. Do not remove a replacement ES device from its protective package until immediately before you are ready to install it. (Most replacement ES devices are packaged with leads electrically shorted together by conductive foam, aluminum foil or comparable conductive material).
7. Immediately before removing the protective material from the leads of a replacement ES device, touch the protective material to the chassis or circuit assembly into which the device will be installed.
   CAUTION: Be sure no power is applied to the chassis or circuit, and observe all other safety precautions.
8. Minimize bodily motions when handling unpackaged replacement ES devices. (Otherwise harmless motion such as the brushing together of your clothes fabric or the lifting of your foot from a carpeted floor can generate static electricity sufficient to damage an ES device.)

General Soldering Guidelines

1. Use a grounded-tip, low-wattage soldering iron and appropriate tip size and shape that will maintain tip temperature within the range or 500°F to 600°F.
2. Use an appropriate gauge of RMA resin-core solder composed of 60 parts tin/40 parts lead.
3. Keep the soldering iron tip clean and well tinned.
4. Thoroughly clean the surfaces to be soldered. Use a mall wire-bristle (0.5 inch, or 1.25cm) brush with a metal handle.
   Do not use freon-propelled spray-on cleaners.
5. Use the following unsoldering technique
   a. Allow the soldering iron tip to reach normal temperature. (500°F to 600°F)
   b. Heat the component lead until the solder melts.
   c. Quickly draw the melted solder with an anti-static, suction-type solder removal device or with solder braid.
   CAUTION: Work quickly to avoid overheating the circuit board printed foil.
6. Use the following soldering technique.
   a. Allow the soldering iron tip to reach a normal temperature (500°F to 600°F)
   b. First, hold the soldering iron tip and solder the strand against the component lead until the solder melts.
   c. Quickly move the soldering iron tip to the junction of the component lead and the printed circuit foil, and hold it there only until the solder flows onto and around both the component lead and the foil.
   CAUTION: Work quickly to avoid overheating the circuit board printed foil.
   d. Closely inspect the solder area and remove any excess or splashed solder with a small wire-bristle brush.

Copyright © 2011 LG Electronics. Inc. All right reserved.
Only for training and service purposes

LGE Internal Use Only

IC Remove/Replacement

Some chassis circuit boards have slotted holes (oblong) through which the IC leads are inserted and then bent flat against the circuit foil. When holes are the slotted type, the following technique should be used to remove and replace the IC. When working with boards using the familiar round hole, use the standard technique as outlined in paragraphs 5 and 6 above.

Removal

1. Desolder and straighten each IC lead in one operation by gently prying up on the lead with the soldering iron tip as the solder melts.
2. Draw away the melted solder with an anti-static suction-type solder removal device (or with solder braid) before removing the IC.

Replacement

1. Carefully insert the replacement IC in the circuit board.
2. Carefully bend each IC lead against the circuit foil pad and solder it.
3. Clean the soldered areas with a small wire-bristle brush. (It is not necessary to reapply acrylic coating to the areas).

"Small-Signal" Discrete Transistor
Removal/Replacement

1. Remove the defective transistor by clipping its leads as close as possible to the component body.
2. Bend into a "U" shape the end of each of three leads remaining on the circuit board.
3. Bend into a "U" shape the replacement transistor leads.
4. Connect the replacement transistor leads to the corresponding leads extending from the circuit board and crimp the "U" with long nose pliers to insure metal to metal contact then solder each connection.

Power Output, Transistor Device
Removal/Replacement

1. Heat and remove all solder from around the transistor leads.
2. Remove the heat sink mounting screw (if so equipped).
3. Carefully remove the transistor from the heat sink of the circuit board.
4. Insert new transistor in the circuit board.
5. Solder each transistor lead, and clip off excess lead.
6. Replace heat sink.

Diode Removal/Replacement

1. Remove defective diode by clipping its leads as close as possible to diode body.
2. Bend the two remaining leads perpendicular y to the circuit board.
3. Observing diode polarity, wrap each lead of the new diode around the corresponding lead on the circuit board.
4. Securely crimp each connection and solder it.
5. Inspect (on the circuit board copper side) the solder joints of the two "original" leads. If they are not shiny, reheat them and if necessary, apply additional solder.

Fuse and Conventional Resistor
Removal/Replacement

1. Clip each fuse or resistor lead at top of the circuit board hollow stake.
2. Securely crimp the leads of replacement component around notch at stake top.
3. Solder the connections.
   CAUTION: Maintain original spacing between the replaced component and adjacent components and the circuit board to prevent excessive component temperatures.

Circuit Board Foil Repair

Excessive heat applied to the copper foil of any printed circuit board will weaken the adhesive that bonds the foil to the circuit board causing the foil to separate from or "lift-off" the board. The following guidelines and procedures should be followed whenever this condition is encountered.

At IC Connections

To repair a defective copper pattern at IC connections use the following procedure to install a jumper wire on the copper pattern side of the circuit board. (Use this technique only on IC connections).

1. Carefully remove the damaged copper pattern with a sharp knife. (Remove only as much copper as absolutely necessary).
2. carefully scratch away the solder resist and acrylic coating (if used) from the end of the remaining copper pattern.
3. Bend a small "U" in one end of a small gauge jumper wire and carefully crimp it around the IC pin. Solder the IC connection.
4. Route the jumper wire along the path of the out-away copper pattern and let it overlap the previously scraped end of the good copper pattern. Solder the overlapped area and clip off any excess jumper wire.

At Other Connections

Use the following technique to repair the defective copper pattern at connections other than IC Pins. This technique involves the installation of a jumper wire on the component side of the circuit board.

1. Remove the defective copper pattern with a sharp knife. Remove at least 1/4 inch of copper, to ensure that a hazardous condition will not exist if the jumper wire opens.
2. Trace along the copper pattern from both sides of the pattern break and locate the nearest component that is directly connected to the affected copper pattern.
3. Connect insulated 20-gauge jumper wire from the lead of the nearest component on one side of the pattern break to the lead of the nearest component on the other side.
   Carefully crimp and solder the connections.
   CAUTION: Be sure the insulated jumper wire is dressed so the it does not touch components or sharp edges.

Copyright © 2011 LG Electronics. Inc. All right reserved.
Only for training and service purposes

LGE Internal Use Only

SPECIFICATION

NOTE : Specifications and others are subject to change without notice for improvement.

1. Application range

This specification is applied to LCD TV used LT01U chassis.

2. Requirement for Test

Each part is tested as below without special appointment.

1) Temperature : 25 ºC ± 5 ºC (77 ºF ± 9 ºF), CST : 40ºC ± 5 ºC
2) Relative Humidity : 65 ± 10 %
3) Power Voltage : Standard input voltage (100-240V~50/60Hz)
   * Standard Voltage of each products is marked by models.
4) Specification and performance of each parts are followed each drawing and specification by part number in accordance with BOM.
5) The receiver must be operated for about 20 minutes prior to the adjustment.

3. Test method

1) Performance: LGE TV test method followed
2) Demanded other specification
   - Safety: CE / IEC / BSMI specification
     EMI: CE / IEC / BSMI

Copyright © 2011 LG Electronics. Inc. All right reserved.
Only for training and service purposes

LGE Internal Use Only

4. Electrical specification

4.1. Module Specification

No	Item	Specification			Remark
1	Screen Device	32”/37”/42”/47”/55” wide Color Display module			LCD
2	Aspect Ratio	16:9			
3	LCD Module	31.55 inch			T315HW04 V9(AUO)
		31.51inch			LC320EXN-SDA1(LGD) LC320EUN-SDV2(LGD) LC320WUN-SCA2(LGD) LC320WXN-SCA2(LGD)
		37inch			LC370WUE-SCA1(LGD) KC370EUN-SDV2(LGD)
		42inch			LC420WUE-SCA2(LGD) V420H2-LE5(CMI) LC420EUF-SDA1(LGD) LC420EUF-SDF1(LGD) LC420EUN-SDV3(LGD)
		47inch			LC470WUF-SCA2(LGD) LC470EUF-SDA1(LGD) LC470EUF-SDF1(LGD)
		55inch			LC550EUF-SDA1(LGD)
4	Operating Environment	1) Temp. : 0 ~ 40 deg			
		2) Humidity : 0 ~ 80%			
5	Storage Environment	1) Temp.: -20 ~ 60 deg			
		2) Humidity : 0 ~ 85 %			
6	Input Voltage	AC100-240V~, 50/60Hz			
7	Power Consumption	40.78W	32”	HD	LC320EXN-SDA1(LGD)
		105W	32”	FHD	T315HW04 V9(AUO)
		61W	32”	FHD	T315HW07-V8(AUO FHD LED)
		148W	37”	FHD	LC370WUE-SCA1(LGD)
		176W	42”	FHD	LC420WUE-SCA2(LGD)
		125W	42”	FHD	V420H2-LE5(CMI)
		233W	47”	FHD	LC470WUF-SCA2(LGD)
		128.3W	55”	FHD	LC550EUF-SDA1(LGD)
8	Module Size	LGD	32”	735.4 (H) x 433.0 (V) x 10.8 (D)	LC320EXN-SDA1(LGD)
		AUO	32”	760.0 (H) x 450.0 (V) x 46.9 (D)	T315HW04 V9(AUO)
		LGD	37”	877.0 (H) x 516.8 (V) x 36.4 (D)	LC370WUE-SCA1(LGD)
		LGD	42”	983.0 (H) x 576.0 (V) x 46.0 (D)	LC420WUE-SCA2(LGD)
		CMI	42”	968.4 (H) x 564 (V) x 10.8 (D)	V420H2-LE5(CMI)
		LGD	47”	1096.0(H) x 640.0(V) x 35.5 (D)	LC470WUF-SCA2(LGD)

Copyright © 2011 LG Electronics. Inc. All right reserved.
Only for training and service purposes

LGE Internal Use Only

5. Chroma& Brightness

5.1. Module optical specification

5.1.1. 32” TFT-LCD Module (AUO) – T315HW04 V9

No.	Item	Specification		Min.	Typ.	Max.	Remark
1.	Viewing Angle<CR>10>	Right/Left/Up/Down		89			CR > 10
2.	Luminance	Luminance (cd/m²)		320	400		
		Variation			-	1.3	
3.	Contrast Ratio	CR		3200	4000		All white/ All black
4.	CIE Color Coordinates	White	WX	Typ - 0.03	0.28	Typ +0.03	PSM: Vivid, CSM: Cool White (85IRE)
			WY		0.29		
		RED	Xr		0.64		
			Yr		0.33		
		Green	Xg		0.29		
			Yg		0.60		
		Blue	Xb		0.15		
			Yb		0.06		

1) Optical characteristics are determined after the unit has been ‘ON’ and stable in a dark environment at 25±2°C
2) Surface luminance is the luminance value at center 1-point across the LCD surface 50cm from the surface with all pixels displaying white.

5.1.2. 32” TFT-LCD Module (CMI) – V315B5-LE3

No.	Item	Specification		Min.	Typ.	Max.	Remark
1.	Viewing Angle<CR>10>	Right/Left/Up/Down		88			CR > 10
2.	Luminance	Luminance (cd/m²)		360	450		
		Variation			-	1.3	
3.	Contrast Ratio	CR		3750	5000		All white/ All black
4.	CIE Color Coordinates	White	WX	Typ - 0.03	0.280	Typ +0.03	PSM: Vivid, CSM: Cool White (85IRE)
			WY		0.290		
		RED	Xr		0.648		
			Yr		0.321		
		Green	Xg		0.304		
			Yg		0.617		
		Blue	Xb		0.149		
			Yb		0.063		

1) Optical characteristics are determined after the unit has been ‘ON’ and stable in a dark environment at 25±2°C
2) Surface luminance is the luminance value at center 1-point across the LCD surface 50cm from the surface with all pixels displaying white.

Copyright © 2011 LG Electronics. Inc. All right reserved.
Only for training and service purposes

LGE Internal Use Only

5.1.3. 32” TFT-LCD Module (CMI) – V315H3-LE7

No.	Item	Specification		Min.	Typ.	Max.	Remark
1.	Viewing Angle<CR>10>	Right/Left/Up/Down		88			CR > 10
2.	Luminance	Luminance (cd/m²)		360	450		
		Variation			-	1.3	
3.	Contrast Ratio	CR		3500	5000		All white/ All black
4.	CIE Color Coordinates	White	WX	Typ - 0.03	0.280	Typ +0.03	PSM: Vivid, CSM: Cool White (85IRE)
			WY		0.290		
		RED	Xr		0.635		
			Yr		0.323		
		Green	Xg		0.288		
			Yg		0.600		
		Blue	Xb		0.148		
			Yb		0.050		

1) Optical characteristics are determined after the unit has been ‘ON’ and stable in a dark environment at 25±2°C
2) Surface luminance is the luminance value at center 1-point across the LCD surface 50cm from the surface with all pixels displaying white.

5.1.4. 32” TFT-LCD Module (IPS) – VVX32H109G00

No.	Item	Specification		Min.	Typ.	Max.	Remark
1.	Viewing Angle<CR>10>	Right/Left/Up/Down		88			CR > 10
2.	Luminance	Luminance (cd/m²)					
		Variation			-	1.3	
3.	Contrast Ratio	CR		700	1200		All white/ All black
4.	CIE Color Coordinates	White	WX	Typ - 0.03	0.278	Typ +0.03	PSM: Vivid, CSM: Cool White (85IRE)
			WY		0.285		
		RED	Xr		0.645		
			Yr		0.330		
		Green	Xg		0.300		
			Yg		0.620		
		Blue	Xb		0.153		
			Yb		0.065		

1) Optical characteristics are determined after the unit has been ‘ON’ and stable in a dark environment at 25±2°C
2) Surface luminance is the luminance value at center 1-point across the LCD surface 50cm from the surface with all pixels displaying white.

Copyright © 2011 LG Electronics. Inc. All right reserved.
Only for training and service purposes

LGE Internal Use Only

5.1.5. 37” TFT-LCD Module (LGD) – LC37WUE-SCA1

No.	Item	Specification		Min.	Typ.	Max.	Remark
1.	Viewing Angle<CR>10>	Right/Left/Up/Down		89			CR > 10
2.	Luminance	Luminance (cd/m²)		400	500		
		Variation			-	1.3	
3.	Contrast Ratio	CR		1100	1500		All white/ All black
4.	CIE Color Coordinates	White	WX	Typ - 0.03	0.279	Typ +0.03	PSM: Vivid, CSM: Cool White (85IRE)
			WY		0.292		
		RED	Xr		0.634		
			Yr		0.334		
		Green	Xg		0.289		
			Yg		0.606		
		Blue	Xb		0.145		
			Yb		0.065		

1) Optical characteristics are determined after the unit has been ‘ON’ and stable in a dark environment at 25±2°C
2) Surface luminance is the luminance value at center 1-point across the LCD surface 50cm from the surface with all pixels displaying white.

5.1.6. 37” TFT-LCD Module (AUO) – T370HW05-V1

No.	Item	Specification		Min.	Typ.	Max.	Remark
1.	Viewing Angle<CR>10>	Right/Left/Up/Down		89			CR > 10
2.	Luminance	Luminance (cd/m²)		320	400		
		Variation			-	1.3	
3.	Contrast Ratio	CR		3200	4000		All white/ All black
4.	CIE Color Coordinates	White	WX	Typ - 0.03	0.280	Typ +0.03	PSM: Vivid, CSM: Cool White (85IRE)
			WY		0.290		
		RED	Xr		0.640		
			Yr		0.330		
		Green	Xg		0.320		
			Yg		0.620		
		Blue	Xb		0.150		
			Yb		0.050		

1) Optical characteristics are determined after the unit has been ‘ON’ and stable in a dark environment at 25±2°C
2) Surface luminance is the luminance value at center 1-point across the LCD surface 50cm from the surface with all pixels displaying white.

Copyright © 2011 LG Electronics. Inc. All right reserved.
Only for training and service purposes

LGE Internal Use Only

5.1.7. 42” LCD Module (LGD) – LC420WUE-SCA2

No.	Item	Specification		Min.	Typ.	Max.	Remark
1.	Viewing Angle<CR>10>	Right/Left/Up/Down		89			CR > 10
2.	Luminance	Luminance (cd/m²)		400	500		
		Variation			-	1.3	
3.	Contrast Ratio	CR		1100	1500		All white/ All black
4.	CIE Color Coordinates	White	WX	Typ - 0.03	0.279	Typ +0.03	PSM: Vivid, CSM: Cool White (85IRE)
			WY		0.292		
		RED	Xr		0.636		
			Yr		0.335		
		Green	Xg		0.291		
			Yg		0.603		
		Blue	Xb		0.146		
			Yb		0.061		

1) Optical characteristics are determined after the unit has been ‘ON’ and stable in a dark environment at 25±2°C
2) Surface luminance is the luminance value at center 1-point across the LCD surface 50cm from the surface with all pixels displaying white.

5.1.8. 42” TFT-LCD Module (CMO) – V420H2-LE5

No.	Item	Specification		Min.	Typ.	Max.	Remark
1.	Viewing Angle<CR>10>	Right/Left/Up/Down		80	80		CR > 10
2.	Luminance	Luminance (cd/m²)		300	400		
		Variation			-	1.3	
3.	Contrast Ratio	CR		4200	6000		All white/ All black
4.	CIE Color Coordinates	White	WX	Typ - 0.03	0.280	Typ +0.03	PSM: Vivid, CSM: Cool White (85IRE)
			WY		0.290		
		RED	Xr		0.644		
			Yr		0.331		
		Green	Xg		0.295		
			Yg		0.617		
		Blue	Xb		0.148		
			Yb		0.053		

1) Optical characteristics are determined after the unit has been ‘ON’ and stable in a dark environment at 25±2°C
2) Surface luminance is the luminance value at center 1-point across the LCD surface 50cm from the surface with all pixels displaying white.

Copyright © 2011 LG Electronics. Inc. All right reserved.
Only for training and service purposes

LGE Internal Use Only

5.1.9. 42” TFT-LCD Module (AUO) – T420HW08-V1

No.	Item	Specification		Min.	Typ.	Max.	Remark
1.	Viewing Angle<CR>10>	Right/Left/Up/Down		89			CR > 10
2.	Luminance	Luminance (cd/m²)			400		
		Variation			-	1.3	
3.	Contrast Ratio	CR		4200	6000		All white/ All black
4.	CIE Color Coordinates	White	WX	Typ - 0.03	0.280	Typ +0.03	PSM: Vivid, CSM: Cool White (85IRE)
			WY		0.290		
		RED	Xr		0.640		
			Yr		0.330		
		Green	Xg		0.281		
			Yg		0.590		
		Blue	Xb		0.144		
			Yb		0.060		

1) Optical characteristics are determined after the unit has been ‘ON’ and stable in a dark environment at 25±2°C
2) Surface luminance is the luminance value at center 1-point across the LCD surface 50cm from the surface with all pixels displaying white.

5.1.10. 47” LCD Module (LGD) – LC470WUF-SCA2

No.	Item	Specification		Min.	Typ.	Max.	Remark
1.	Viewing Angle<CR>10>	Right/Left/Up/Down		89			CR > 10
2.	Luminance	Luminance (cd/m²)		400	500		
		Variation			-	1.3	
3.	Contrast Ratio	CR		1100	1450		All white/ All black
4.	CIE Color Coordinates	White	WX	Typ - 0.03	0.279	Typ +0.03	PSM: Vivid, CSM: Cool White (85IRE)
			WY		0.292		
		RED	Xr		0.639		
			Yr		0.334		
		Green	Xg		0.290		
			Yg		0.606		
		Blue	Xb		0.146		
			Yb		0.058		

1) Optical characteristics are determined after the unit has been ‘ON’ and stable in a dark environment at 25±2°C
2) Surface luminance is the luminance value at center 1-point across the LCD surface 50cm from the surface with all pixels displaying white.

Copyright © 2011 LG Electronics. Inc. All right reserved.
Only for training and service purposes

LGE Internal Use Only

5.1.11. 55” LCD Module (LGD) – LC550EUF-SDA1

No.	Item	Specification		Min.	Typ.	Max.	Remark
1.	Viewing Angle<CR>10>	Right/Left/Up/Down		89			CR > 10
2.	Luminance	Luminance (cd/m²)		360	450		
		Variation			-	1.3	
3.	Contrast Ratio	CR		1100	1600		All white/ All black
4.	CIE Color Coordinates	White	WX	Typ - 0.03	0.279	Typ +0.03	PSM: Vivid, CSM: Cool White (85IRE)
			WY		0.292		
		RED	Xr		0.649		
			Yr		0.332		
		Green	Xg		0.307		
			Yg		0.595		
		Blue	Xb		0.149		
			Yb		0.059		

1) Optical characteristics are determined after the unit has been ‘ON’ and stable in a dark environment at 25±2°C
2) Surface luminance is the luminance value at center 1-point across the LCD surface 50cm from the surface with all pixels displaying white.

5.2. Chroma (PSM:Vivid, Color Temperature:Cool)

- except “RGB PC Mode PSM: Standard, Color Temperature:Medium”

** The W/B Tolerance is ±0.002 for Adjustment, but for DQA ±0.015

No.	Item		Min	Typ	Max	Remark
1.	Cool	White Balance,X axis	0.267	0.269	0.271	PSM: Vivid, CSM: Cool, White (85IRE)
		White Balance,Y axis	0.271	0.273	0.275	
2.	Medium	White Balance,X axis	0.283	0.285	0.287	Color Temp : C50 -> Cool
		White Balance,Y axis	0.291	0.293	0.295	0 -> Medium
3.	Warm	White Balance,X axis	0.311	0.313	0.315	W50 -> Warm
		White Balance,Y axis	0.327	0.329	0.331	

Copyright © 2011 LG Electronics. Inc. All right reserved.
Only for training and service purposes

LGE Internal Use Only

6. Component Video Input (Y, CB/PB, CR/PR)

No	Specification				Remark
	Resolution	H-freq(kHz)	V-freq(Hz)		
1.	720x480	15.73	60.00	SDTV,DVD 480i	
2.	720x480	15.63	59.94	SDTV,DVD 480i	
3.	720x480	31.47	59.94	480p	
4.	720x480	31.50	60.00	480p	
5.	720x576	15.625	50.00	SDTV,DVD 625 Line	
6.	720x576	31.25	50.00	HDTV 576p	
7.	1280x720	37.50	50.00	HDTV 720p	
8.	1280x720	44.96	59.94	HDTV 720p	
9.	1280x720	45.00	60.00	HDTV 720p	
10.	1920x1080	28.125	50.00	HDTV 1080i	
11.	1920x1080	33.75	60.00	HDTV 1080i	
12.	1920x1080	33.72	59.94	HDTV 1080i	
13.	1920x1080	56.250	50	HDTV 1080p	
14.	1920x1080	67.43/67.5	59.94/60	HDTV 1080p	

7. RGB (PC)

No	Specification				Proposed	Remark
	Resolution	H-freq(kHz)	V-freq(Hz)	Pixel Clock(MHz)		
1.	720*400	31.468	70.08	28.321		For only DOS mode
2.	640*480	31.469	59.94	25.17	VESA	Input 848*480 60Hz, 852*480 60Hz -> 640*480 60Hz Display
3.	800*600	37.879	60.31	40.00	VESA	
4.	1024*768	48.363	60.00	65.00	VESA(XGA)	
5.	1280*768	47.78	59.87	79.5	WXGA	
6.	1360*768	47.72	59.8	84.75	WXGA	
7.	1920*1080	66.587	59.93	138.625	WUXGA	FHD model

Copyright © 2011 LG Electronics. Inc. All right reserved.
Only for training and service purposes

LGE Internal Use Only

8. HDMI Input (PC/DTV)

8.1. DTV Mode

No	Resolution	H-freq(kHz)	V-freq.(Hz)	Pixel clock(MHz)	Proposed	Remark
1.	720*480	31.469 /31.5	59.94 / 60	27.00/27.03	SDTV 480P	
2.	720*576	31.25	50	54	SDTV 576P	
3.	1280*720	37.500	50	74.25	HDTV 720P	
4.	1280*720	44.96 / 45	59.94 / 60	74.17/ 74.25	HDTV 720P	
5.	1920*1080	33.72 / 33.75	59.94 / 60	74.17/ 74.25	HDTV 1080I	
6.	1920*1080	28.125	50.00	74.25	HDTV 1080I	
7.	1920*1080	26.97 / 27	23.97 / 24	74.17/ 74.25	HDTV 1080P	
8.	1920*1080	33.716 / 33.75	29.976 / 30.00	74.25	HDTV 1080P	
9.	1920*1080	56.250	50	148.5	HDTV 1080P	
10.	1920*1080	67.43 / 67.5	59.94 / 60	148.35/148.50	HDTV 1080P	

8.2. PC Mode

No	Resolution	H-freq(kHz)	V-freq.(Hz)	Pixel clock(MHz)	Proposed	Remark
1.	720*400	31.468	70.08	28.321		HDCP
2.	640*480	31.469	59.94	25.17	VESA	HDCP
3.	800*600	37.879	60.31	40.00	VESA	HDCP
4.	1024*768	48.363	60.00	65.00	VESA(XGA)	HDCP
5.	1280*768	47.78	59.87	79.5	WXGA	HDCP
6.	1360*768	47.72	59.8	84.75	WXGA	HDCP
7.	1920*1080	67.5	60	148.5	WUXGA	HDCP

Copyright © 2011 LG Electronics. Inc. All right reserved.
Only for training and service purposes

LGE Internal Use Only

ADJUSTMENT INSTRUCTION

1. Application Range

This specification sheet is applied to all of the LCD TV with LT01T/U chassis.

2. Designation

1) The adjustment is according to the order which is designated and which must be followed, according to the plan which can be changed only on agreeing.
2) Power Adjustment: Free Voltage
3) Magnetic Field Condition: Nil.
4) Input signal Unit: Product Specification Standard
5) Reserve after operation: Above 5 Minutes (Heat Run)
   Temperature : at 25±5ºC
   Relative humidity : 65±10%
   Input voltage : 220V, 60Hz
6) Adjustment equipments: Color Analyzer (CA-210 or CA-110), Pattern Generator(MSPG-925L or Equivalent), DDC Adjustment Jig equipment, SVC remote controller
7) Push The "IN STOP KEY" - For memory initialization.

Case1 : Software version up
1. After downloading S/W by USB, TV set will reboot automatically
2. Push "In-stop" key
3. Push "Power on" key
4. Function inspection
5. After function inspection, Push "I n-stop" key.

Case2 : Function check at the assembly line
1. When TV set is entering on the assembly line, Push "In-stop" key at first.
2. Push "Power on" key for turning it on.
   -> If you push "Power on" key, TV set will recover channel information by itself.
3. After function inspection, Push "In-stop" key.

3. Main PCB check process

* APC - After Manual-Insert, executing APC

* Boot file Download

(1) Execute ISP program "Mstar ISP Utility" and then click "Config" tab.
(2) Set as below, and then click "Auto Detect" and check "OK" message.
If "Error" is displayed, Check connection between computer, jig, and set..
(3) Click "Read" tab, and then load download file (XXXX.bin) by clicking "Read".

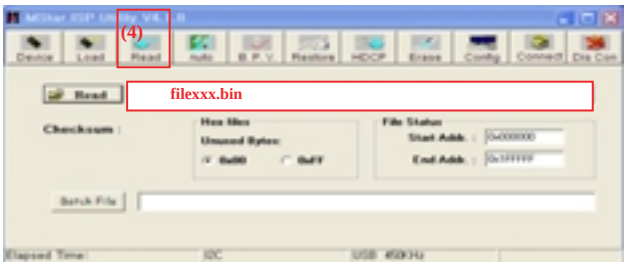

(4) Click "Connect" tab. If "Can't" is displayed, check connection between computer, jig, and set.

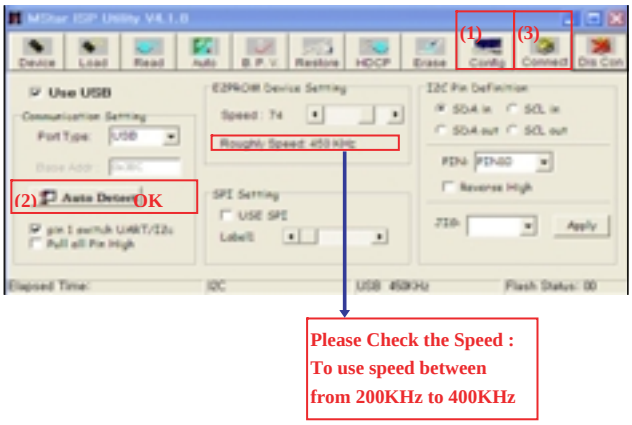

(5) Click "Auto" tab and set as below
(6) Click "Run".
(7) After downloading, check "OK" message.

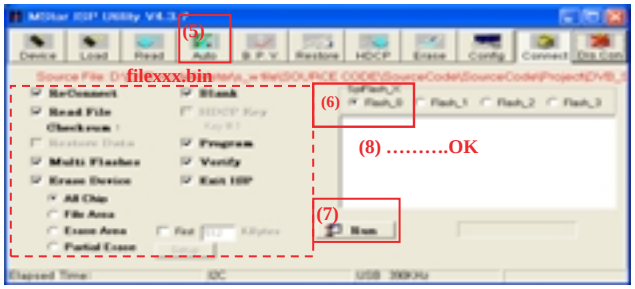

Copyright © 2011 LG Electronics. Inc. All right reserved.
Only for training and service purposes

LGE Internal Use Only

* USB DOWNLOAD(*.epk file download)

(1) Put the USB Stick to the USB socket.
(2) Automatically detecting update file in USB Stick.
- If your downloaded program version in USB Stick is Low, it didn't work. But your downloaded version is High, USB data is automatically detecting

(3) Show the message "Copying files from memory"

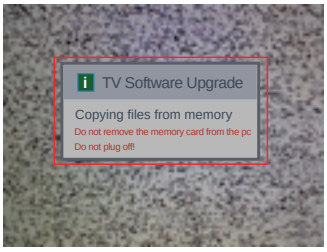

(4) Updating is staring.

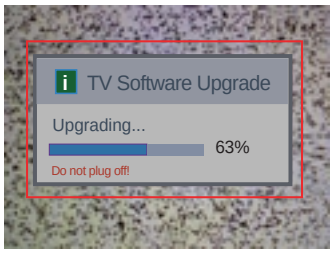

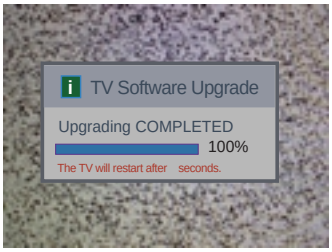

(5) After updating is complete, The TV will restart automatically.
(6) If TV turns on, check your updated version and Tool option. (refer to the next page about tool option)
* If downloading version is higher than your TV have, TV can lost all channel data. In this case, you have to channel recover. If all channel data is cleared, you didn't have a DTV/ATV test on production line.

* After downloading, have to adjust Tool Option again.

1. Push "IN-START" key in service remote controller.
2. Select "Tool Option 1" and Push "OK" button.
3. Punch in the number. (Each model has their number.)

Model	Tool option1	Tool option2	Tool option3	Tool option4	Tool option5
42LV3500-DA_CMI	26468	19478	55332	26892	41
37LV3500-DA_AUO	22376	19478	55332	26892	41
32LV3500-DA_CMI	18276	19478	55332	26892	41
32LV2500-DA_CMI	18212	19478	55332	26892	41
26LV2500-DA_LGD	14112	8714	55332	26892	41
47LK550-DC_LGD	34529	19478	55300	26892	8224
42LK450-DA_LGD	26241	18966	55300	26892	8224
37LK450-DA_LGD	22145	18966	55300	26892	8224
32LK450-DA_AUO	18056	18966	55300	26892	33
32LK330-DB_IPS	18000	18966	51204	26892	33
26LK330-DB_AUO	13896	18966	51204	26892	33
22LK330-DB_CMI	9796	18966	51204	26892	33
55LV3500-DA_LGD	46944	19478	55332	26892	8224

4. Completed selecting Tool option.

3.1. ADC Process

(1) ADC
- Enter Service Mode by pushing " ADJ" key
- Enter Internal ADC mode by pushing "G" key at "6. ADC Calibration"

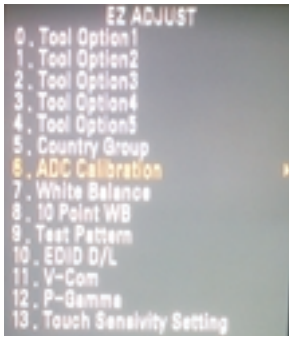

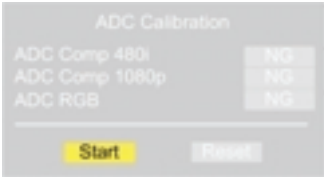

* Caution: Using 'power on' button of the Adj. R/C, power on TV.

* ADC Calibration Protocol (RS232)

No.	Item	CMD1	CMD2	Data0	
1	Enter Adjust Mode	A	A	0	0
2	ADC Adjust	A	D	0	0

- Adjust Sequence
  - aa 00 00 [Enter Adjust Mode]
  - xb 00 40 [Component1 Input (480i)]
  - ad 00 10 [Adjust 480i Comp1]
  - xb 00 60 [RGB Input (1024x768)]
  - ad 00 10 [Adjust 1024x768 RGB]
  - aa 00 90 [End Adjust Mode]

  * Required equipment : Adjustment R/C

3.2. Function Check

(1) Check display and sound
- Check Input and Signal items. (cf. work instructions)
  1) TV
  2) AV (CVBS)
  3) COMPONENT (480i)
  4) RGB (PC : 1024 x 768 @ 60hz)
  5) HDMI
  6) PC Audio In
  * Display and sound check is executed by remote control.

Copyright © 2011 LG Electronics. Inc. All right reserved.
Only for training and service purposes

LGE Internal Use Only

4. Total Assembly line process

4.1. Adjustment Preparation

· W/B Equipment condition
CA210 : CH 9, Test signal : Inner pattern (85IRE)
· Above 5 minutes H/run in the inner pattern. (“power on” key of adjust remote control)

Cool	13,000k	ºK	X=0.269(±0.002) Y=0.273(±0.002)	All <Test Signal>
Medium	9,300k	ºK	X=0.285(±0.002) Y=0.293(±0.002)	Inner pattern (216gray,85IRE)
Warm	6,500k	ºK	X=0.313(±0.002) Y=0.329(±0.002)	

Cool	9,300k	ºK	X=0.285(±0.002) Y=0.293(±0.002)	Only 22LD350 <Test Signal>
Medium	8,000k	ºK	X=0.295(±0.002) Y=0.305(±0.002)	Inner pattern (216gray,85IRE)
Warm	6,500k	ºK	X=0.313(±0.002) Y=0.329(±0.002)	

4.1.1. Connecting picture of the measuring instrument

(On Automatic control)
Inside PATTERN is used when W/B is controlled. Connect to auto controller or push Adjustment R/C POWER ON -> Enter the mode of White-Balance, the pattern will come out

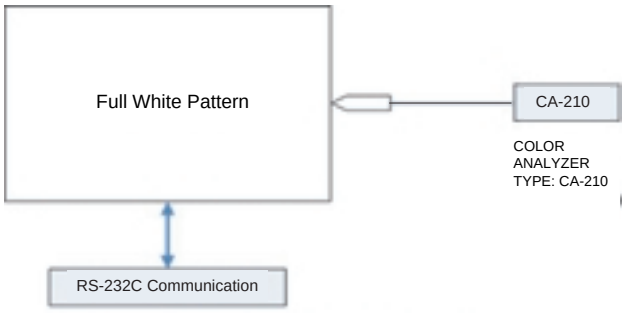

4.1.2. Auto-control interface and directions

1) Adjust in the place where the influx of light like floodlight around is blocked. (illumination is less than 10ux).
2) Adhere closely the Color Analyzer (CA210) to the module less than 10cm distance, keep it with the surface of the Module and Color Analyzer’s Prove vertically.(80~100°).
3) Aging time
   - After aging start, keep the power on (no suspension of power supply) and heat-run over 15minutes.
   - Using ‘no signal’ or ‘full white pattern’ or the others, check the back light on.

4.1.3. Auto adjustment Map (RS-232C)

	RS-232C COMMAND [CMD ID DATA]			MIN	CENTER (DEFAULT)			MAX
	Cool	Mid	Warm		Cool	Mid	Warm	
R Gain	jg	Ja	jd	00	172	192	192	255
G Gain	jh	Jb	je	00	172	192	192	255
B Gain	ji	Jc	jf	00	192	192	172	255
R Cut					64	64	64	128
G Cut					64	64	64	128
B Cut					64	64	64	128

**Caution **
Color Temperature : COOL, Medium, Warm.
One of R Gain/G Gain/ B Gain should be kept on 0xC0, and adjust other two lower than C0.
(when R/G/B Gain are all C0, it is the FULL Dynamic Range of Module)

4.2. Manual W/B process using adj. R/C

• After enter Service Mode by pushing “ADJ” key,
• Enter White Balance by pushing “G”key at “7.White Balance”

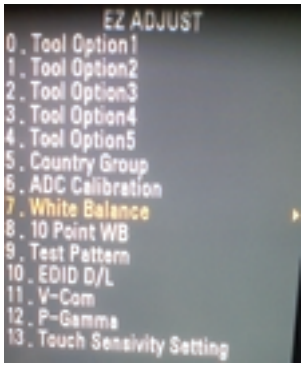

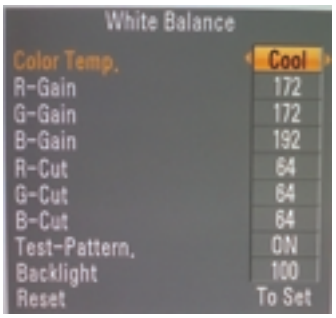

* After done all adjustments, Press “In-start” button and compare Tool option and Area option
value with its BOM, if it is correctly same then unplug the AC cable.
If it is not same, then correct it same with BOM and unplug AC cable.
For correct it to the model’s module from factory JIG model.
* Push The “IN STOP KEY” after completing the function inspection.

Copyright © 2011 LG Electronics. Inc. All right reserved.
Only for training and service purposes

LGE Internal Use Only

4.3. DDC EDID Write (RGB 128Byte)

· Connect D-sub Signal Cable to D-Sub Jack.
· Write EDID DATA to EEPROM (24C02) by using DDC2B protocol.
· Check whether written EDID data is correct or not.
* For SVC main Ass'y, EDID have to be downloaded to Insert Process in advance.

4.4 DDC EDID Write (HDMI 256Byte)

· Connect HDMI Signal Cable to HDMI Jack.
· Write EDID DATA to EEPROM(24C02) by using DDC2B protocol.
· Check whether written EDID data is correct or not.
* For SVC main Ass'y, EDID have to be downloaded to Insert Process in advance.

4.5 EDID DATA

1) All Data : HEXA Value
2) Changeable Data :
*: Serial No : Controlled / Data:01
**: Month : Controlled / Data:00
***:Year : Controlled
****:Check sum

- Auto Download

· After enter Service Mode by Pushing "ADJ" key
· Enter EDID D/L mode.
· Enter "START' by pushing "OK" key.

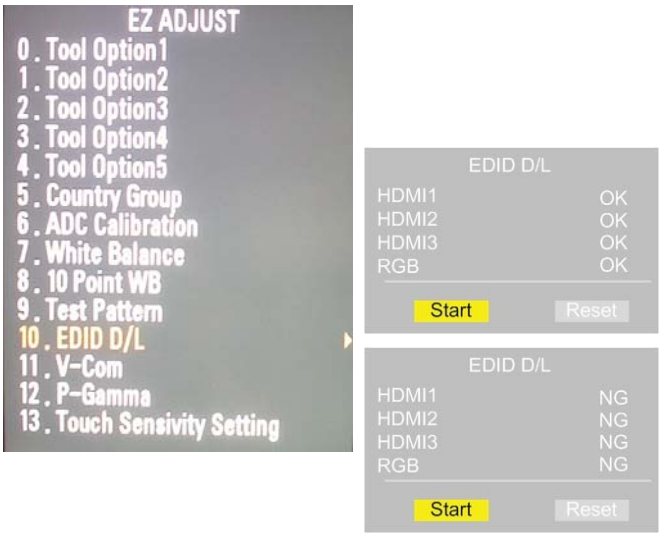

HDMI number is dependent on model.

- Manual Download

* Caution
1) Use the proper signal cable for EDID Download
- Analog EDID : Pin3 exists
- Digital EDID : Pin3 exists
2) Nerver connect HDMI & D-sub Cable at the same time.
3) Use the proper cables below for EDID Writing.
4) Download HDMI1, HDMI2 separately because each data is different.

For Analog EDID	For HDMI EDID	
D-sub to D-sub	DVI-D to HDMI or HDMI to HDMI	

Item	Condition	Data(Hex)
Manufacturer ID	GSM	1E6D
Version	Digital : 1	01
Revision	Digital : 3	03

(1) FHD RGB EDID Data (CS : 1C)

Addr	00	01	02	03	04	05	06	07	08	09	0A	0B	0C	0D	0E	0F
0000	00	FF	FF	FF	FF	FF	FF	00	1E	6D	01	00	01	01	01	01
0010	01	15	01	03	68	10	09	78	0A	EE	91	A3	54	4C	99	26
0020	0F	50	54	A1	08	00	81	80	61	40	45	40	31	40	01	01
0030	01	01	01	01	01	01	02	3A	80	18	71	38	2D	40	58	2C
0040	45	00	A0	5A	00	00	00	1E	01	1D	00	72	51	D0	1E	20
0050	6E	28	55	00	A0	5A	00	00	00	1E	00	00	00	FD	00	3A
0060	3E	1E	53	10	00	0A	20	20	20	20	20	20	00	00	00	FC
0070	00	4C	47	20	54	56	0A	20	20	20	20	20	20	20	00	1C
0080	FF	FF	FF	FF	FF	FF	FF	FF	FF	FF	FF	FF	FF	FF	FF	FF
0090	FF	FF	FF	FF	FF	FF	FF	FF	FF	FF	FF	FF	FF	FF	FF	FF
00A0	FF	FF	FF	FF	FF	FF	FF	FF	FF	FF	FF	FF	FF	FF	FF	FF
00B0	FF	FF	FF	FF	FF	FF	FF	FF	FF	FF	FF	FF	FF	FF	FF	FF
00C0	FF	FF	FF	FF	FF	FF	FF	FF	FF	FF	FF	FF	FF	FF	FF	FF
00D0	FF	FF	FF	FF	FF	FF	FF	FF	FF	FF	FF	FF	FF	FF	FF	FF
00E0	FF	FF	FF	FF	FF	FF	FF	FF	FF	FF	FF	FF	FF	FF	FF	FF
00F0	FF	FF	FF	FF	FF	FF	FF	FF	FF	FF	FF	FF	FF	FF	FF	FF

(2) FHD HDMI 1 EDID Data (CS : E299)

Addr	00	01	02	03	04	05	06	07	08	09	0A	0B	0C	0D	0E	0F
0000	00	FF	FF	FF	FF	FF	FF	00	1E	6D	01	00	01	01	01	01
0010	01	15	01	03	80	10	09	78	0A	EE	91	A3	54	4C	99	26
0020	0F	50	54	A1	08	00	71	4F	81	80	01	01	01	01	01	01
0030	01	01	01	01	01	01	02	3A	80	18	71	38	2D	40	58	2C
0040	45	00	A0	5A	00	00	00	1E	1B	21	50	A0	51	00	1E	30
0050	48	88	35	00	A0	5A	00	00	00	1C	00	00	00	FD	00	3A
0060	3E	1E	53	10	00	0A	20	20	20	20	20	20	00	00	00	FC
0070	00	4C	47	20	54	56	0A	20	20	20	20	20	20	20	01	E2
0080	02	03	26	F1	4E	10	1F	84	13	05	14	03	02	12	20	21
0090	22	15	01	26	15	07	50	09	57	07	67	03	0C	00	10	00
00A0	B8	2D	E3	05	03	01	01	1D	80	18	71	1C	16	20	58	2C
00B0	25	00	A0	5A	00	00	00	9E	01	1D	00	72	51	D0	1E	20
00C0	6E	28	55	00	A0	5A	00	00	00	1E	02	3A	80	18	71	38
00D0	2D	40	58	2C	45	00	A0	5A	00	00	00	1E	01	1D	00	BC
00E0	52	D0	1E	20	B8	28	55	40	A0	5A	00	00	00	1E	00	00
00F0	00	00	00	00	00	00	00	00	00	00	00	00	00	00	00	99

Copyright © 2011 LG Electronics. Inc. All right reserved.
Only for training and service purposes

LGE Internal Use Only

(3) FHD HDMI 2 EDID Data (CS : E289)

Addr	00	01	02	03	04	05	06	07	08	09	0A	0B	0C	0D	0E	0F
0000	00	FF	FF	FF	FF	FF	FF	00	1E	6D	01	00	01	01	01	01
0010	01	15	01	03	80	10	09	78	0A	EE	91	A3	54	4C	99	26
0020	0F	50	54	A1	08	00	71	4F	81	80	01	01	01	01	01	01
0030	01	01	01	01	01	01	02	3A	80	18	71	38	2D	40	58	2C
0040	45	00	A0	5A	00	00	00	1E	1B	21	50	A0	51	00	1E	30
0050	48	88	35	00	A0	5A	00	00	00	1C	00	00	00	FD	00	3A
0060	3E	1E	53	10	00	0A	20	20	20	20	20	20	00	00	00	FC
0070	00	4C	47	20	54	56	0A	20	20	20	20	20	20	20	01	E2
0080	02	03	26	F1	4E	10	1F	84	13	05	14	03	02	12	20	21
0090	22	15	01	26	15	07	50	09	57	07	67	03	0C	00	20	00
00A0	B8	2D	E3	05	03	01	01	1D	80	18	71	1C	16	20	58	2C
00B0	25	00	A0	5A	00	00	00	9E	01	1D	00	72	51	D0	1E	20
00C0	6E	28	55	00	A0	5A	00	00	00	1E	02	3A	80	18	71	38
00D0	2D	40	58	2C	45	00	A0	5A	00	00	00	1E	01	1D	00	BC
00E0	52	D0	1E	20	B8	28	55	40	A0	5A	00	00	00	1E	00	00
00F0	00	00	00	00	00	00	00	00	00	00	00	00	00	00	00	89

(4) FHD HDMI 3 EDID Data (CS : E279)

Addr	00	01	02	03	04	05	06	07	08	09	0A	0B	0C	0D	0E	0F
0000	00	FF	FF	FF	FF	FF	FF	00	1E	6D	01	00	01	01	01	01
0010	01	15	01	03	80	10	09	78	0A	EE	91	A3	54	4C	99	26
0020	0F	50	54	A1	08	00	71	4F	81	80	01	01	01	01	01	01
0030	01	01	01	01	01	01	02	3A	80	18	71	38	2D	40	58	2C
0040	45	00	A0	5A	00	00	00	1E	1B	21	50	A0	51	00	1E	30
0050	48	88	35	00	A0	5A	00	00	00	1C	00	00	00	FD	00	3A
0060	3E	1E	53	10	00	0A	20	20	20	20	20	20	00	00	00	FC
0070	00	4C	47	20	54	56	0A	20	20	20	20	20	20	20	01	E2
0080	02	03	26	F1	4E	10	1F	84	13	05	14	03	02	12	20	21
0090	22	15	01	26	15	07	50	09	57	07	67	03	0C	00	30	00
00A0	B8	2D	E3	05	03	01	01	1D	80	18	71	1C	16	20	58	2C
00B0	25	00	A0	5A	00	00	00	9E	01	1D	00	72	51	D0	1E	20
00C0	6E	28	55	00	A0	5A	00	00	00	1E	02	3A	80	18	71	38
00D0	2D	40	58	2C	45	00	A0	5A	00	00	00	1E	01	1D	00	BC
00E0	52	D0	1E	20	B8	28	55	40	A0	5A	00	00	00	1E	00	00
00F0	00	00	00	00	00	00	00	00	00	00	00	00	00	00	00	79

(5) HD RGB EDID Data (CS : CD)

Addr	00	01	02	03	04	05	06	07	08	09	0A	0B	0C	0D	0E	0F
0000	00	FF	FF	FF	FF	FF	FF	00	1E	6D	01	00	01	01	01	01
0010	01	15	01	03	68	10	09	78	0A	EE	91	A3	54	4C	99	26
0020	0F	50	54	A1	08	00	81	C0	61	40	45	40	31	40	01	01
0030	01	01	01	01	01	01	1B	21	50	A0	51	00	1E	30	48	88
0040	35	00	A0	5A	00	00	00	1C	01	1D	00	72	51	D0	1E	20
0050	6E	28	55	00	A0	5A	00	00	00	1E	00	00	00	FD	00	3A
0060	3E	1F	46	10	00	0A	20	20	20	20	20	20	00	00	00	FC
0070	00	4C	47	20	54	56	0A	20	20	20	20	20	20	20	00	CD
0080	FF	FF	FF	FF	FF	FF	FF	FF	FF	FF	FF	FF	FF	FF	FF	FF
0090	FF	FF	FF	FF	FF	FF	FF	FF	FF	FF	FF	FF	FF	FF	FF	FF
00A0	FF	FF	FF	FF	FF	FF	FF	FF	FF	FF	FF	FF	FF	FF	FF	FF
00B0	FF	FF	FF	FF	FF	FF	FF	FF	FF	FF	FF	FF	FF	FF	FF	FF
00C0	FF	FF	FF	FF	FF	FF	FF	FF	FF	FF	FF	FF	FF	FF	FF	FF
00D0	FF	FF	FF	FF	FF	FF	FF	FF	FF	FF	FF	FF	FF	FF	FF	FF
00E0	FF	FF	FF	FF	FF	FF	FF	FF	FF	FF	FF	FF	FF	FF	FF	FF
00F0	FF	FF	FF	FF	FF	FF	FF	FF	FF	FF	FF	FF	FF	FF	FF	FF

(6) HD HDMI 1 EDID Data (CS : B465)

Addr	00	01	02	03	04	05	06	07	08	09	0A	0B	0C	0D	0E	0F
0000	00	FF	FF	FF	FF	FF	FF	00	1E	6D	01	00	01	01	01	01
0010	01	15	01	03	80	10	09	78	0A	EE	91	A3	54	4C	99	26
0020	0F	50	54	A1	08	00	81	C0	61	40	45	40	31	40	01	01
0030	01	01	01	01	01	01	1B	21	50	A0	51	00	1E	30	48	88
0040	35	00	A0	5A	00	00	00	1C	01	1D	00	72	51	D0	1E	20
0050	6E	28	55	00	A0	5A	00	00	00	1E	00	00	00	FD	00	3A
0060	3E	1F	46	10	00	0A	20	20	20	20	20	20	00	00	00	FC
0070	00	4C	47	20	54	56	0A	20	20	20	20	20	20	20	01	B4
0080	02	03	20	F1	4E	10	1F	84	13	05	14	03	02	12	20	21
0090	22	15	01	26	15	07	50	09	57	07	65	03	0C	00	10	00
00A0	01	1D	80	18	71	1C	16	20	58	2C	25	00	A0	5A	00	00
00B0	00	9E	01	1D	00	80	51	D0	0C	20	40	80	35	00	A0	5A
00C0	00	00	00	1E	8C	0A	D0	8A	20	E0	2D	10	10	3E	96	00
00D0	A0	5A	00	00	00	18	02	3A	80	18	71	38	2D	40	58	2C
00E0	45	00	A0	5A	00	00	00	1E	01	1D	80	D0	72	1C	16	20
00F0	10	2C	25	80	A0	5A	00	00	00	9E	00	00	00	00	00	65

(7) HD HDMI 2 EDID Data (CS : B455)

Addr	00	01	02	03	04	05	06	07	08	09	0A	0B	0C	0D	0E	0F
0000	00	FF	FF	FF	FF	FF	FF	00	1E	6D	01	00	01	01	01	01
0010	01	15	01	03	80	10	09	78	0A	EE	91	A3	54	4C	99	26
0020	0F	50	54	A1	08	00	81	C0	61	40	45	40	31	40	01	01
0030	01	01	01	01	01	01	1B	21	50	A0	51	00	1E	30	48	88
0040	35	00	A0	5A	00	00	00	1C	01	1D	00	72	51	D0	1E	20
0050	6E	28	55	00	A0	5A	00	00	00	1E	00	00	00	FD	00	3A
0060	3E	1F	46	10	00	0A	20	20	20	20	20	20	00	00	00	FC
0070	00	4C	47	20	54	56	0A	20	20	20	20	20	20	20	01	B4
0080	02	03	20	F1	4E	10	1F	84	13	05	14	03	02	12	20	21
0090	22	15	01	26	15	07	50	09	57	07	65	03	0C	00	20	00
00A0	01	1D	80	18	71	1C	16	20	58	2C	25	00	A0	5A	00	00
00B0	00	9E	01	1D	00	80	51	D0	0C	20	40	80	35	00	A0	5A
00C0	00	00	00	1E	8C	0A	D0	8A	20	E0	2D	10	10	3E	96	00
00D0	A0	5A	00	00	00	18	02	3A	80	18	71	38	2D	40	58	2C
00E0	45	00	A0	5A	00	00	00	1E	01	1D	80	D0	72	1C	16	20
00F0	10	2C	25	80	A0	5A	00	00	00	9E	00	00	00	00	00	55

(8) HD HDMI 3 EDID Data (CS : B445)

Addr	00	01	02	03	04	05	06	07	08	09	0A	0B	0C	0D	0E	0F
0000	00	FF	FF	FF	FF	FF	FF	00	1E	6D	01	00	01	01	01	01
0010	01	15	01	03	80	10	09	78	0A	EE	91	A3	54	4C	99	26
0020	0F	50	54	A1	08	00	81	C0	61	40	45	40	31	40	01	01
0030	01	01	01	01	01	01	1B	21	50	A0	51	00	1E	30	48	88
0040	35	00	A0	5A	00	00	00	1C	01	1D	00	72	51	D0	1E	20
0050	6E	28	55	00	A0	5A	00	00	00	1E	00	00	00	FD	00	3A
0060	3E	1F	46	10	00	0A	20	20	20	20	20	20	00	00	00	FC
0070	00	4C	47	20	54	56	0A	20	20	20	20	20	20	20	01	B4
0080	02	03	20	F1	4E	10	1F	84	13	05	14	03	02	12	20	21
0090	22	15	01	26	15	07	50	09	57	07	65	03	0C	00	30	00
00A0	01	1D	80	18	71	1C	16	20	58	2C	25	00	A0	5A	00	00
00B0	00	9E	01	1D	00	80	51	D0	0C	20	40	80	35	00	A0	5A
00C0	00	00	00	1E	8C	0A	D0	8A	20	E0	2D	10	10	3E	96	00
00D0	A0	5A	00	00	00	18	02	3A	80	18	71	38	2D	40	58	2C
00E0	45	00	A0	5A	00	00	00	1E	01	1D	80	D0	72	1C	16	20
00F0	10	2C	25	80	A0	5A	00	00	00	9E	00	00	00	00	00	45

(9) ASCII Code

	0	1	2	3	4	5	6	7	8	9	A	B	C	D	E	F
20		!	"	#	$	%	&	'	(	)	*	+	,	-	.	/
30	0	1	2	3	4	5	6	7	8	9	:	;	<	=	>	?
40	@	A	B	C	D	E	F	G	H	I	J	K	L	M	N	O
50	P	Q	R	S	T	U	V	W	X	Y	Z	[	\	]	^	_
60	`	a	b	c	d	e	f	g	h	i	j	k	l	m	n	o
70	p	q	r	s	t	u	v	w	x	y	z	{	|	}	~	
80			‚	ƒ	„	…	†	‡	ˆ	‰	Š	‹	Œ			
90		‘	’	“	”	•	–	—	˜	™	š	›	œ			Ÿ
A0		¡	¢	£	¤	¥	¦	§	¨	©	ª	«	¬	-	®	¯
B0	°	±	²	³	´	µ	¶	·	¸	¹	º	»	¼	½	¾	¿
C0	À	Á	Â	Ã	Ä	Å	Æ	Ç	È	É	Ê	Ë	Ì	Í	Î	Ï
D0	Ð	Ñ	Ò	Ó	Ô	Õ	Ö	×	Ø	Ù	Ú	Û	Ü	Ý	Þ	ß
E0	à	á	â	ã	ä	å	æ	ç	è	é	ê	ë	ì	í	î	ï
F0	ð	ñ	ò	ó	ô	õ	ö	÷	ø	ù	ú	û	ü	ý	þ	ÿ

4.7. Outgoing condition Configuration

- When pressing IN-STOP key by SVC remocon, Red LED are blinked alternatively. And then Automatically turn off. (Must not AC power OFF during blinking)

4.8. Internal pressure

Confirm whether is normal or not when between power board's ac block and GND is impacted on 1.5 kV(dc) or 2.2 kV(dc) for one second.

Copyright © 2011 LG Electronics. Inc. All right reserved.
Only for training and service purposes

LGE Internal Use Only

EXPLODED VIEW

IMPORTANT SAFETY NOTICE

Many electrical and mechanical parts in this chassis have special safety-related characteristics. These parts are identified by ⚠ in the Schematic Diagram and EXPLODED VIEW.
It is essential that these special safety parts should be replaced with the same components as recommended in this manual to prevent X-RADIATION, Shock, Fire, or other Hazards.
Do not modify the original design without permission of manufacturer.

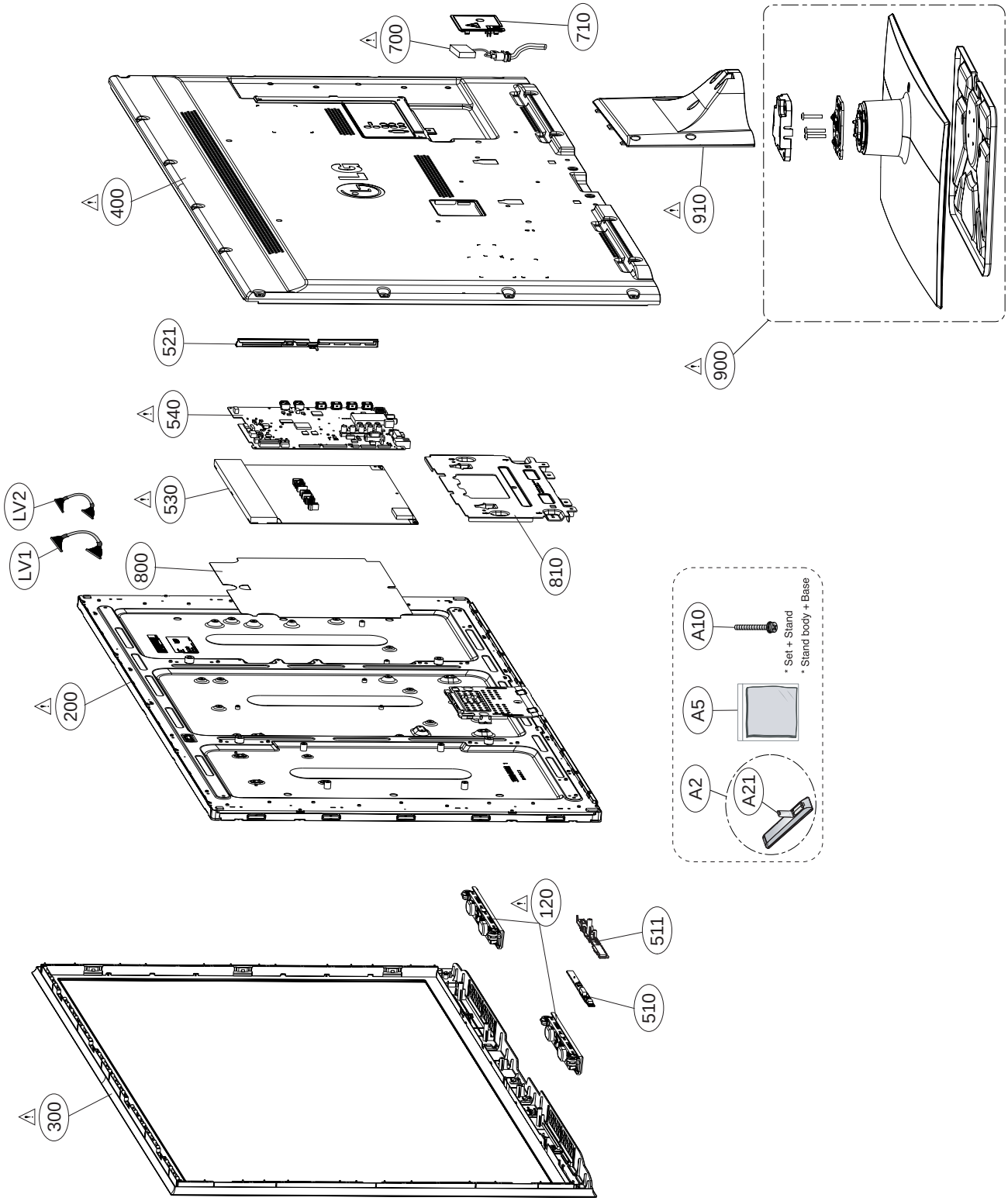

Copyright © 2011 LG Electronics. Inc. All right reserved.
Only for training and service purposes

LGE Internal Use Only

S7M-PLUS_DivX_MS10

LGE107DC-RP [S7M+ DIVX/MS10]

NAND FLASH MEMORY

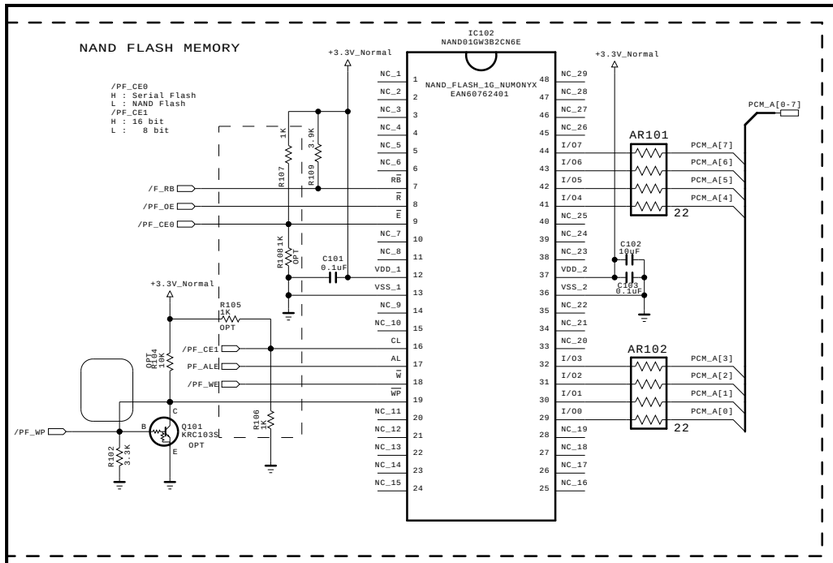

<T3 CHIP Config(AUD_LRCH)>

Boot from SPI flash : 1'b0
Boot from NOR flash : 1'b1

<T3 CHIP Config>
(AUD_SCK, AUD_MASTER_CLK, PWM1, PWM0)

MIPS_no_EJ_NOR8 : 4'h3 (MIPS as host. No EJ PAD. Byte mode NAND flash.)
MIPS_EJ1_NOR8 : 4'h4 (MIPS as host. EJ use PAD1. Byte mode NAND flash.)
MIPS_EJ2_NOR8 : 4'h5 (MIPS as host. EJ use PAD2. Byte mode NAND flash.)
B51_Secure_no scramble : 4'hb (8051 as host. Internal SPI flash secure boot, no scramble)
B51_Sesure_scramble : 4'hc (8051 as host. Internal SPI flash secure boot with scarmble)

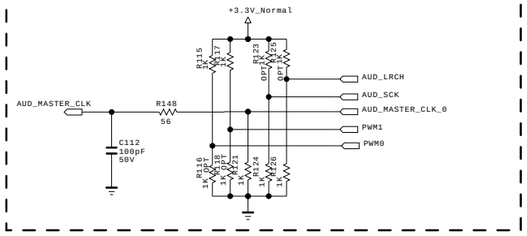

IC101

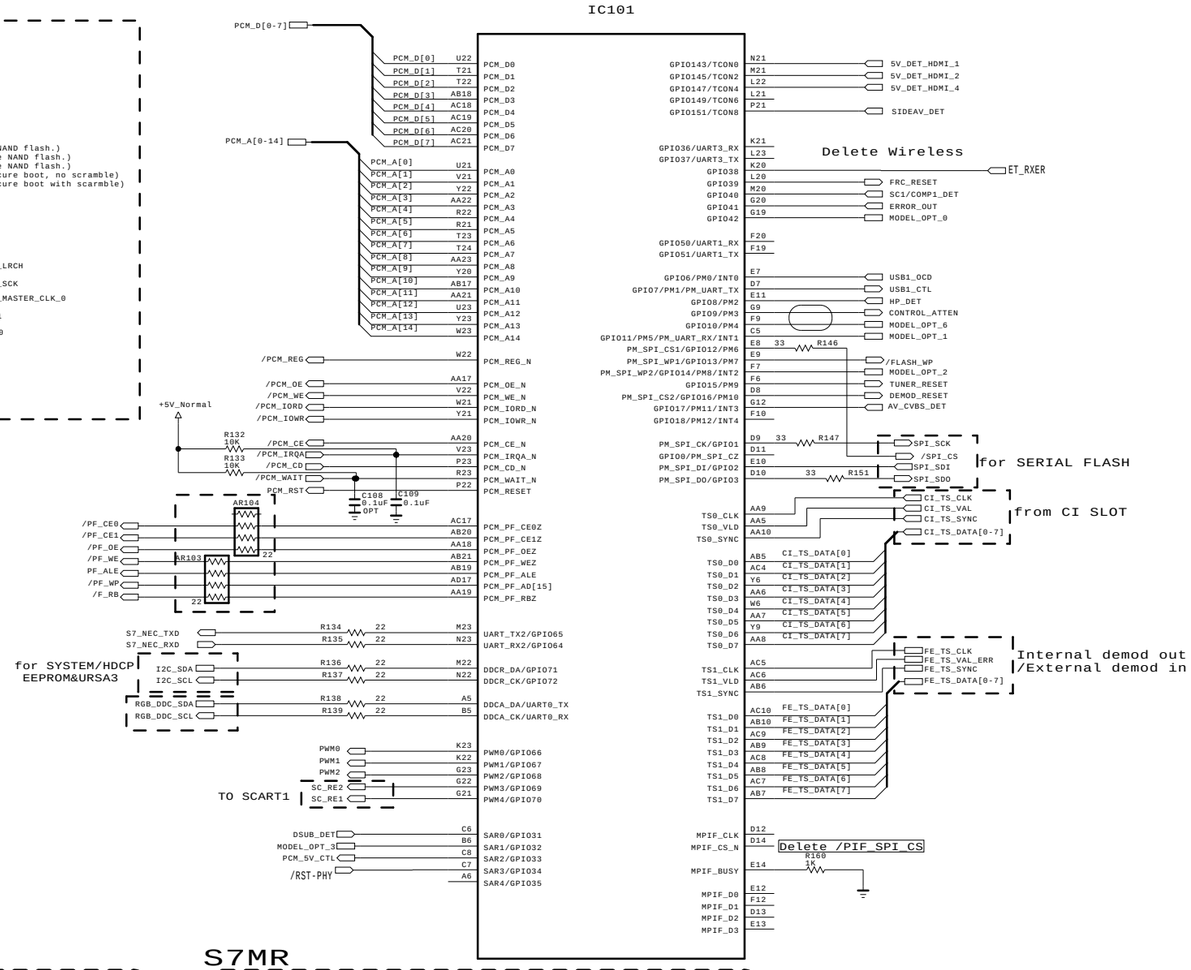

NAND_FLASH_1G_HYNIX

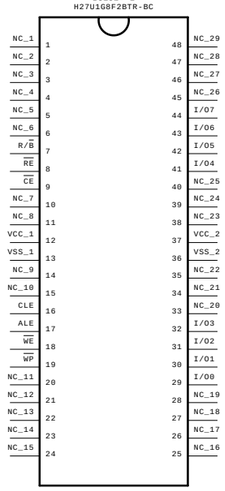

NAND_FLASH_1G_SS

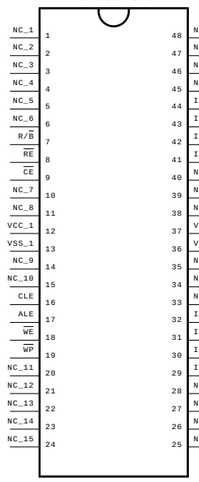

NAND_FLASH_1G_TOSHIBA

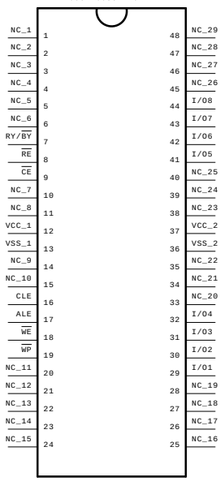

S7R

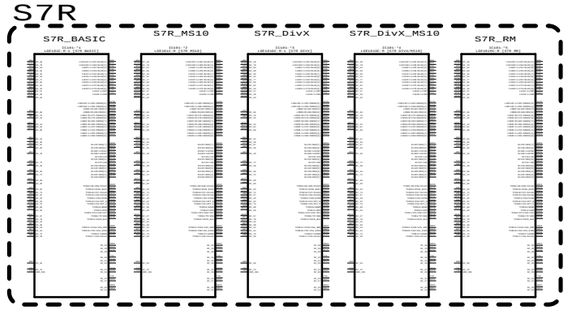

S7MR

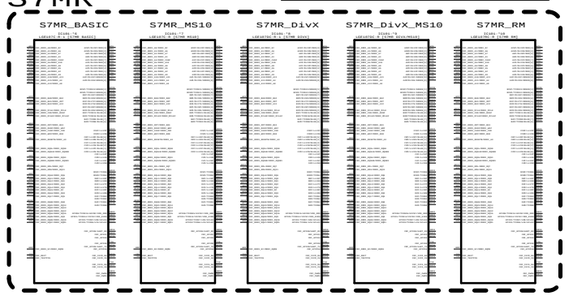

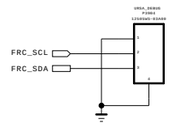

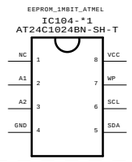

S7MR-PLUS

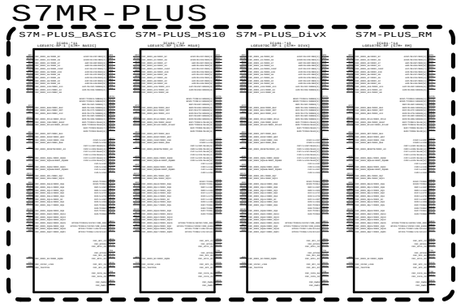

HDCP EEPROM

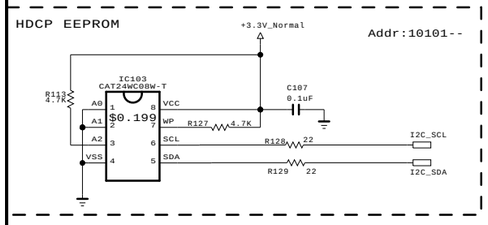

EEPROM

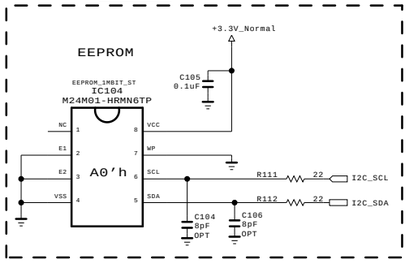

I2C

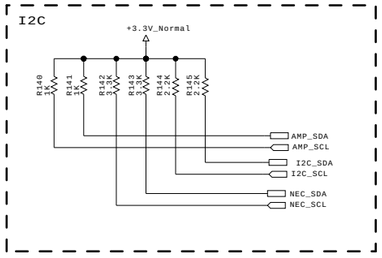

DIMMING

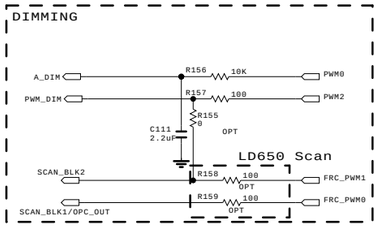

THE ⚠ SYMBOL MARK OF THIS SCHEMETIC DIAGRAM INCORPORATES SPECIAL FEATURES IMPORTANT FOR PROTECTION FROM X-RADIATION. FILRE AND ELECTRICAL SHOCK HAZARDS, WHEN SERVICING IF IS ESSENTIAL THAT ONLY MANUFATURES SPECFIED PARTS BE USED FOR THE CRITICAL COMPONENTS IN THE ⚠ SYMBOL MARK OF THE SCHEMETIC.

SECRET

LGElectronics

LG ELECTRONICS

MODEL	GP3_Saturn7M	DATE	Ver. 0.1
BLOCK	FLASH/EEPROM/GPIO	SHEET	1

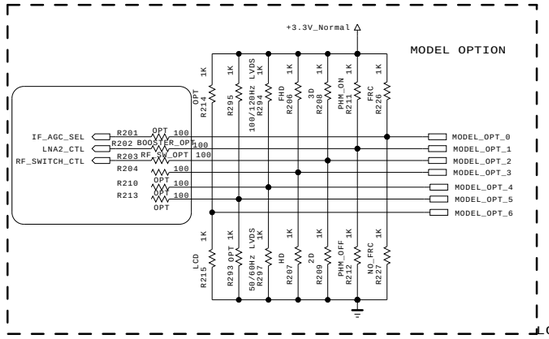

MODEL OPTION

PIN NAME	PIN NO.	LOW	HIGH
MODEL_OPT_0	G19	NO FRC	FRC
MODEL_OPT_4	E18	50/60Hz LVDS	100/120Hz LVDS
MODEL_OPT_1	C5	PHM_OFF	PHM_ON
MODEL_OPT_2	F7	2D	3D
MODEL_OPT_3	B6	HD	FHD
MODEL_OPT_5	D18	Ready	default
MODEL_OPT_6	F9	LCD	OLED

NO_FRC
U3_INTERNAL
US_EXTERNALBOOT
reserved for FRC

OPT_0	OPT_4
: LOW	LOW
: HIGH	LOW
:HIGH	HIGH
: LOW	HIGH

--> This option is only applied in EU.
In case of NON_EU, default value set LOW.

-->In case of GP2, This port was used for GIP/NON_GIP

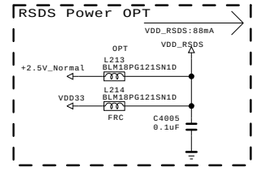

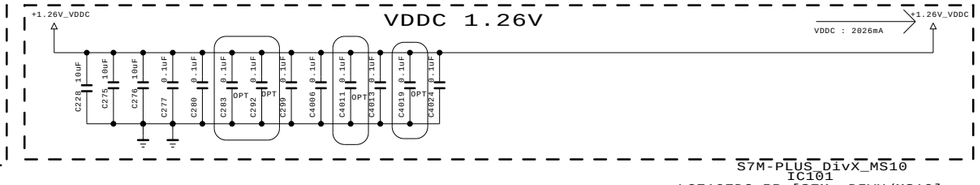

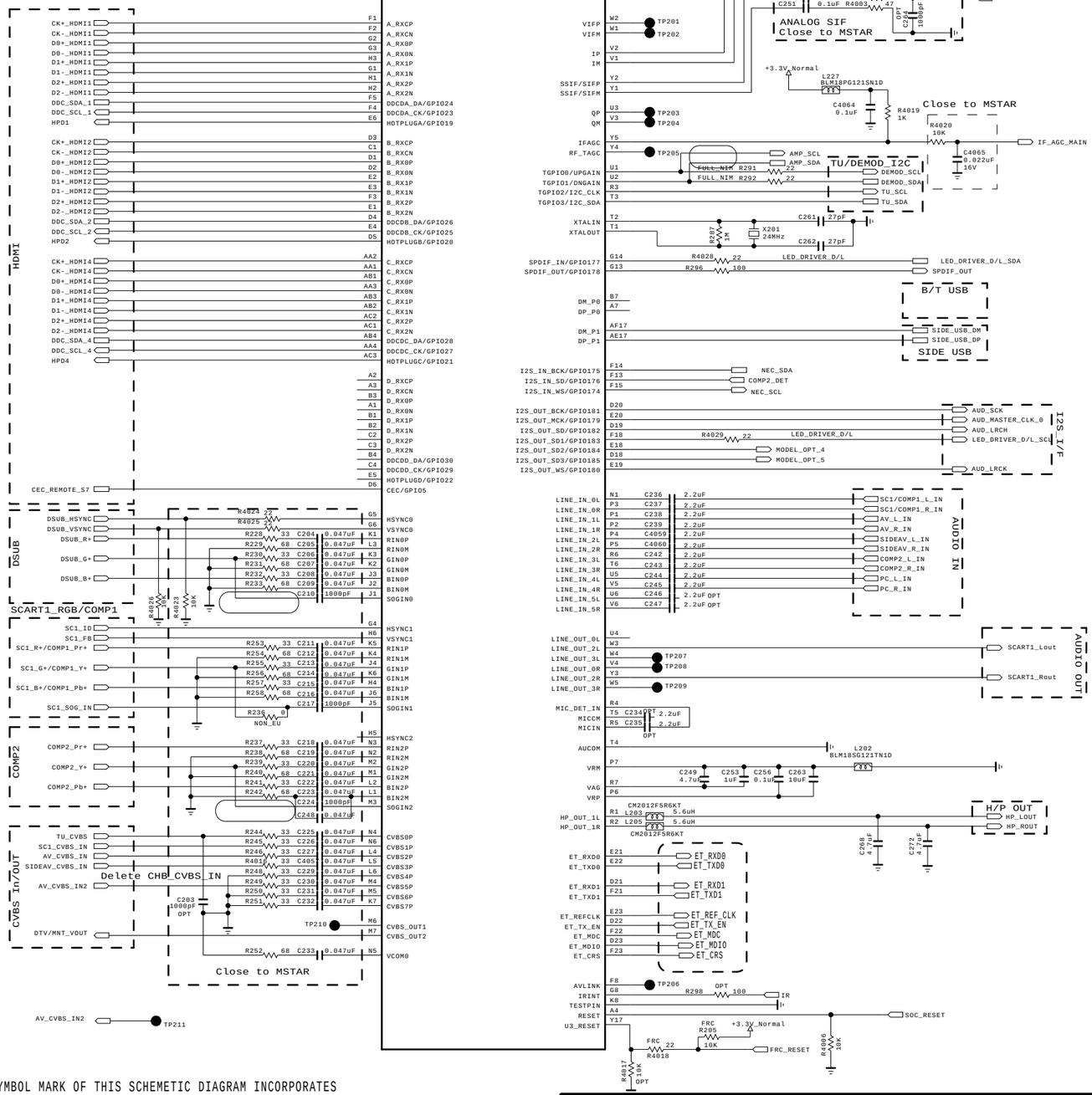

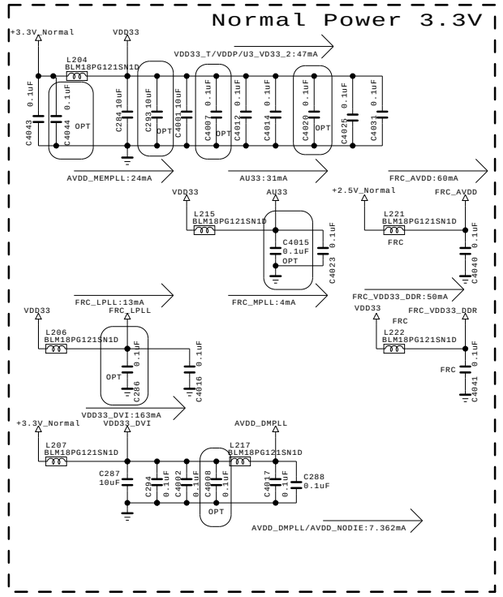

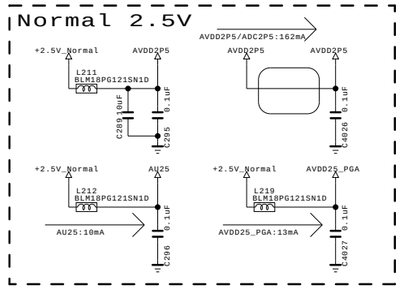

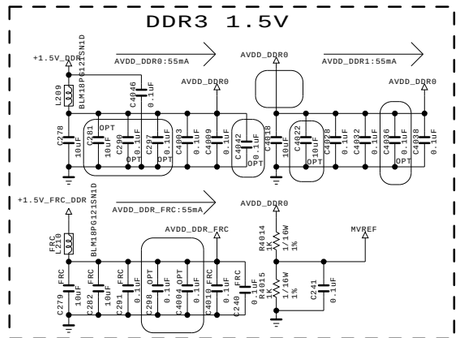

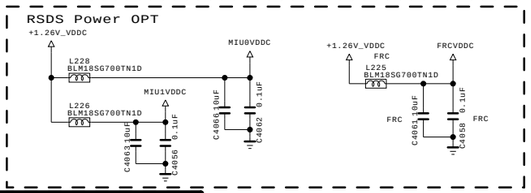

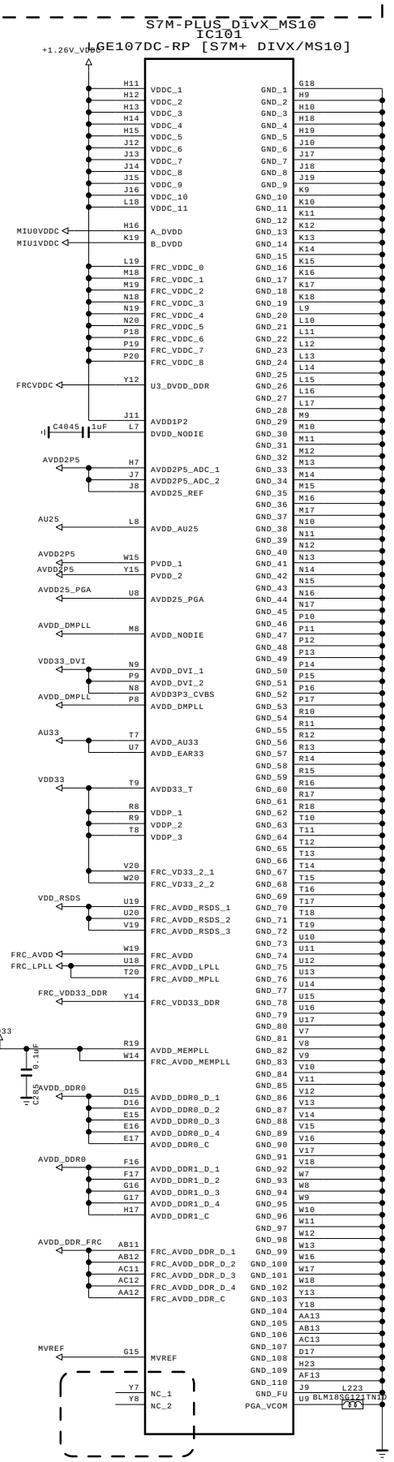

THE ⚠ SYMBOL MARK OF THIS SCHEMETIC DIAGRAM INCORPORATES SPECIAL FEATURES IMPORTANT FOR PROTECTION FROM X-RADIATION. FILRE AND ELECTRICAL SHOCK HAZARDS, WHEN SERVICING IF IS ESSENTIAL THAT ONLY MANUFATURES SPECFIED PARTS BE USED FOR THE CRITICAL COMPONENTS IN THE ⚠ SYMBOL MARK OF THE SCHEMETIC.

SECRET
LGElectronics

LG ELECTRONICS

MODEL	GP2R	DATE	20101023
BLOCK	MAIN2, HW OPT	SHEET	2 /

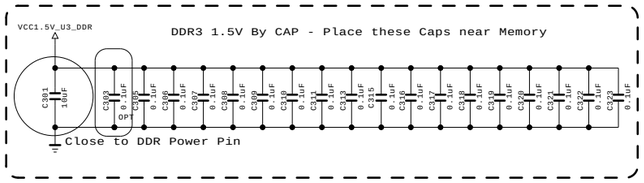

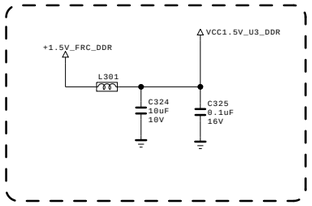

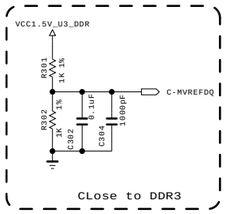

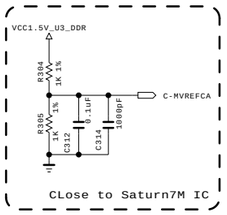

EAN61828901

IC301
H5TQ1G63DFR-H9C

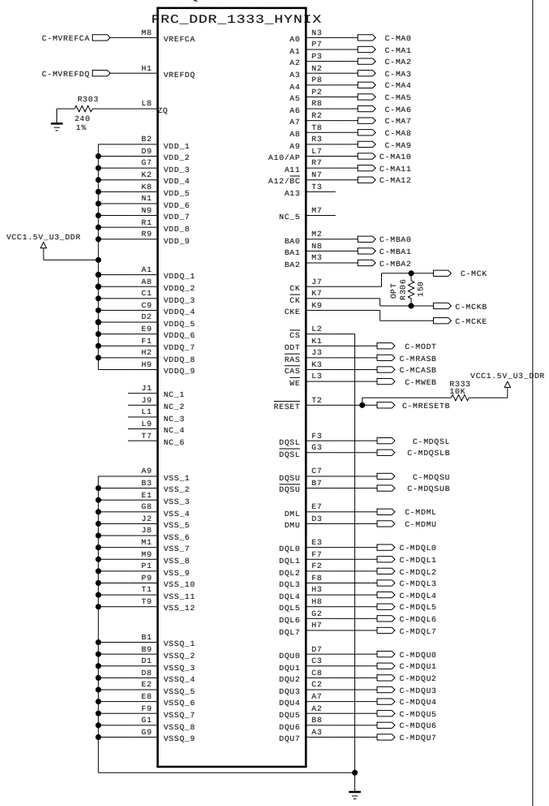

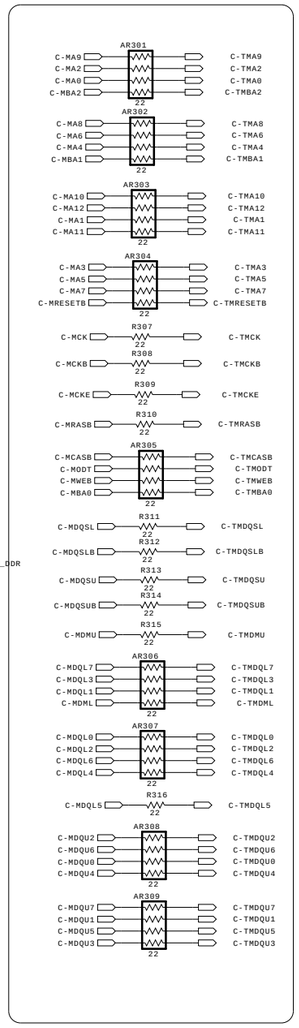

S7M-PLUS_DivX_MS10

IC101
LGE107DC-RP [S7M+ DIVX/MS10]

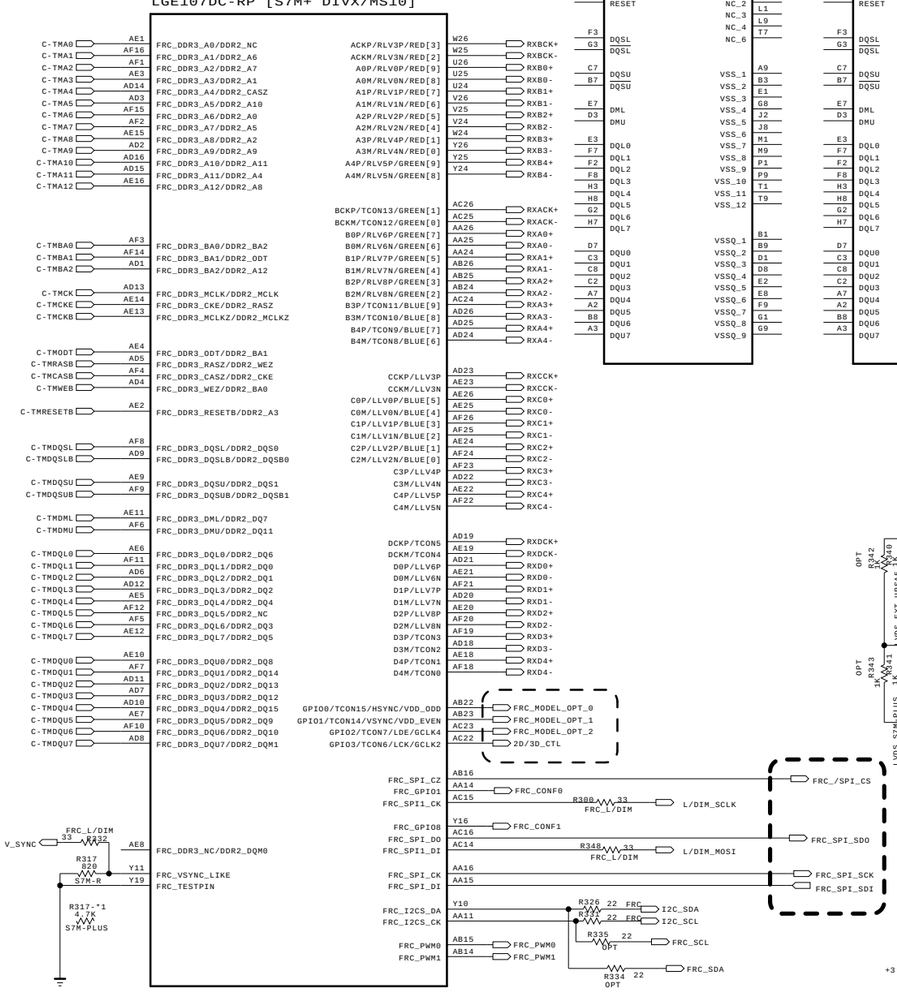

EAN61829001

IC301-*2
H5TQ1G63DFR-PBC

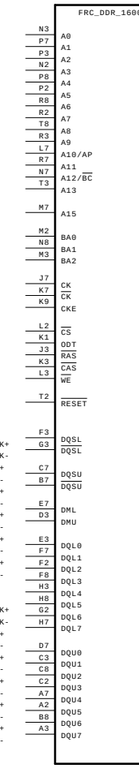

EAN60899001

IC301-*1
K4B1G1646E-HCH9000

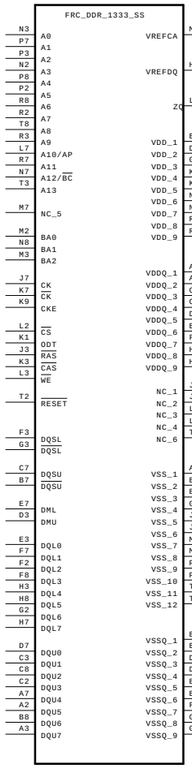

EAN61857101

IC301-*3
K4B1G1646G-BCH9

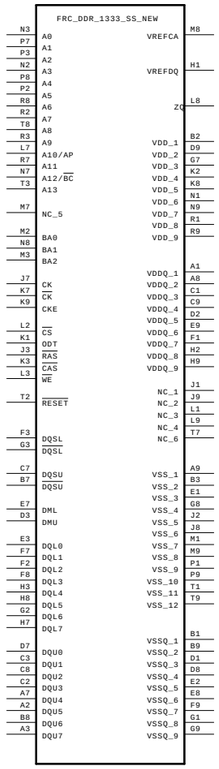

EAN61857201

IC301-*4
NT5CB64M16DP-CF

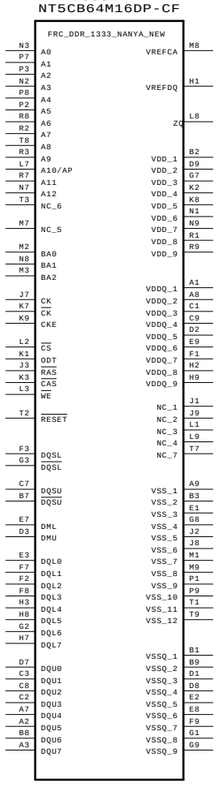

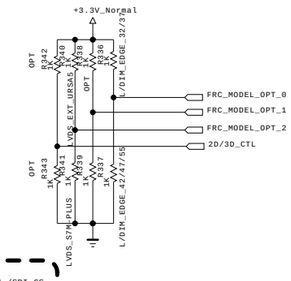

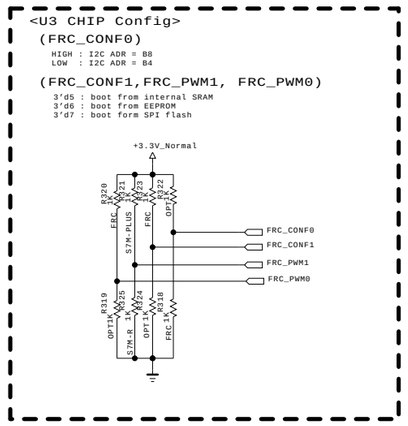

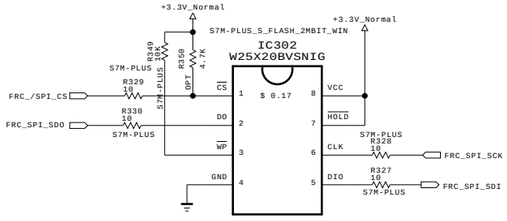

THE ⚠ SYMBOL MARK OF THIS SCHEMETIC DIAGRAM INCORPORATES SPECIAL FEATURES IMPORTANT FOR PROTECTION FROM X-RADIATION. FILRE AND ELECTRICAL SHOCK HAZARDS, WHEN SERVICING IF IS ESSENTIAL THAT ONLY MANUFATURES SPECFIED PARTS BE USED FOR THE CRITICAL COMPONENTS IN THE ⚠ SYMBOL MARK OF THE SCHEMETIC.

SECRET

LGElectronics

LG ELECTRONICS

MODEL	GP2R	DATE	20101023
BLOCK	FRC_DDR	SHEET	3

FROM LIPS & POWER B/D

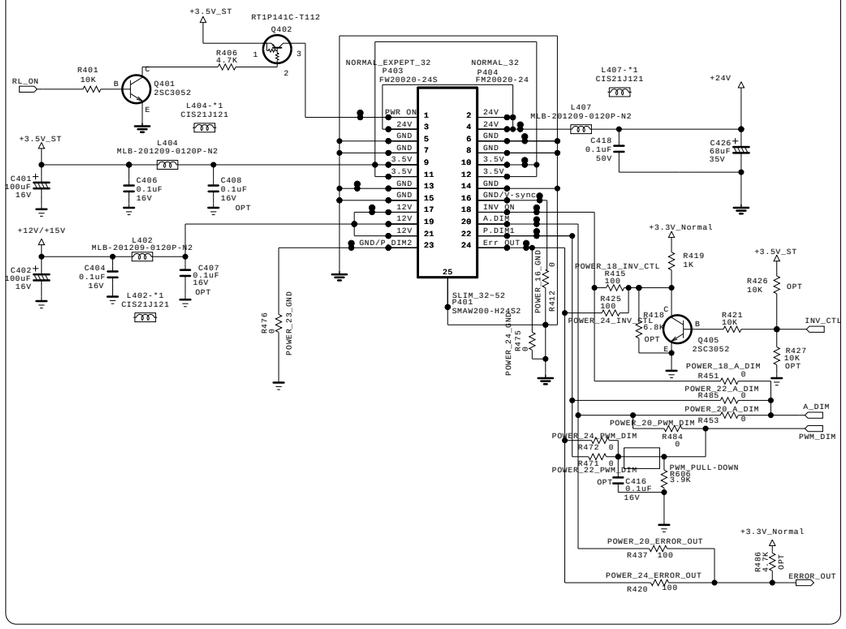

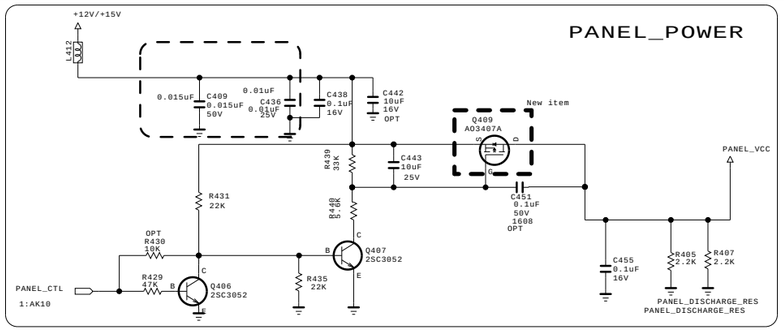

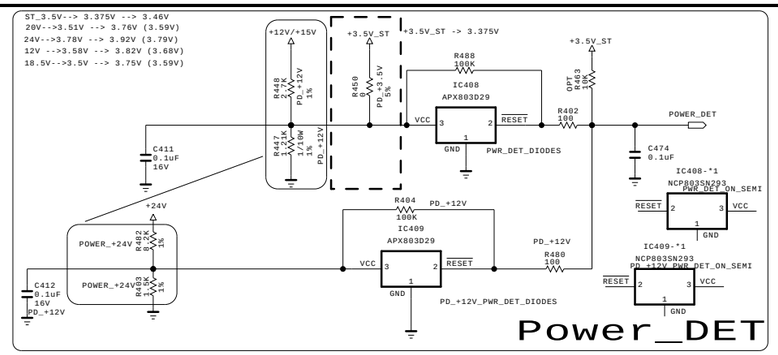

S7M DDR 1.5V

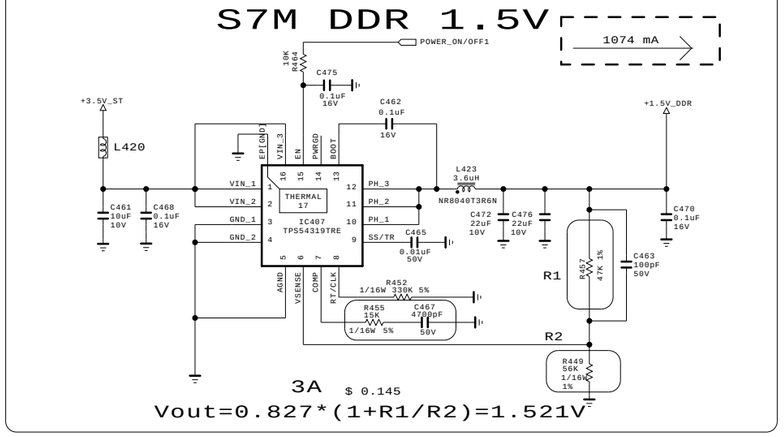

+3.3V_Normal

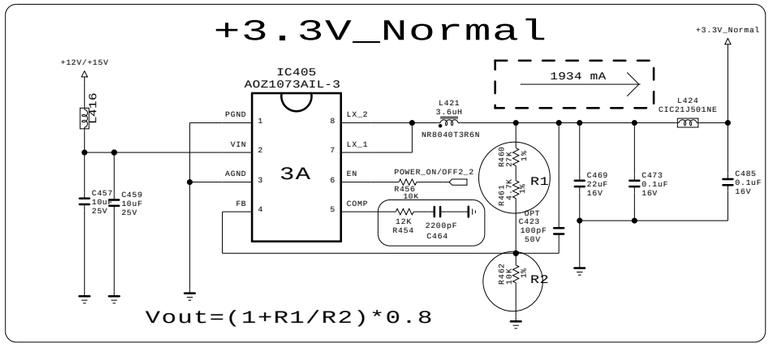

+2.5V/+1.8V

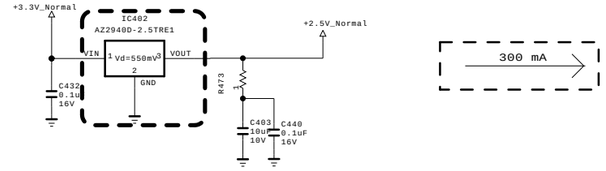

+5V_Normal

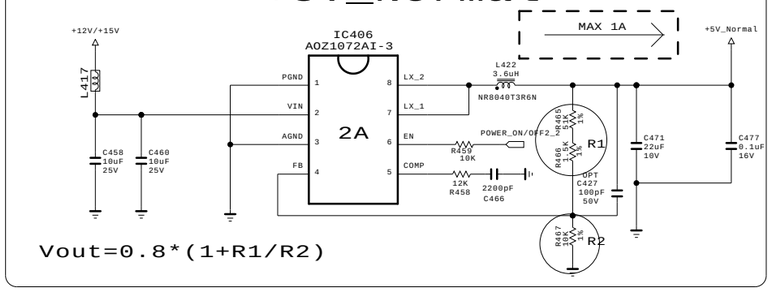

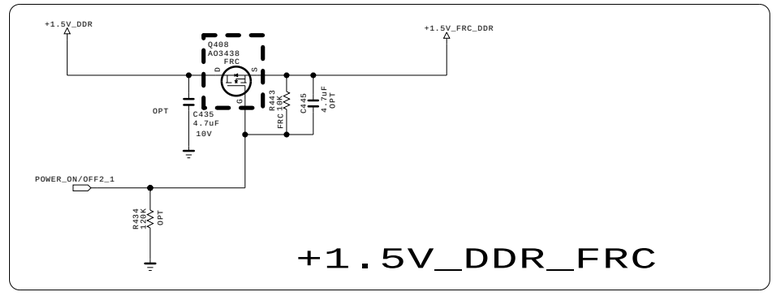

<MODULE PIN MAP>

PIN No	LGD(PSU) or LIPS	CMO10"Lamp (PSU)	AUO 10"Lamp (PSU)	SHARP (PSU)	IPS-@ (PSU)
16	GND	GND	GND	GND	GND
18	INV_ON	A-DIM	INV_ON	INV_ON	INV_ON
20	VBR-A	NC	Err_out	52/60:ERROR 26/32HD:NC	Err_out
22	PWM_DIM	PWM_DIM	NC	26/32/52:PWM 60:NC	NC
24	Err_out	INV_ON	PWM_DIM	26/32/52:GND 60:PWM	PWM_DIM
23	GND	GND	GND	GND	GND

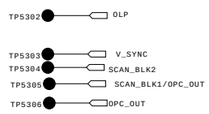

<LED MODULE PIN MAP -> latest update 20100618>

PIN No	LGD LPB/ OS LPB	32LE5300-TA CMO10"LED (PSU)	32LE4500-TA AUO 10"LED (PSU)	32LE5300-TA LGD 10"LED (PSU)	
16	NC	NC	NC	NC	
18	INV_ON	INV_ON	INV_ON	INV_ON	
20	NC	err_out --> NC	err_out --> NC	NC	
22	PWM_DIM	NC	NC	PWM_DIM	
24	err_out --> NC	PWM_DIM	PWM_DIM	err_out --> NC	
23	NC	NC	NC	NC	

LGD edge led error-out use or not? checking is necessary...

<Module Inv to Main Pin Connection>

INV <--> MAIN
#11 <--> #24
#12 <--> #18
#13 <--> #20
#14 <--> #22

+5V_USB

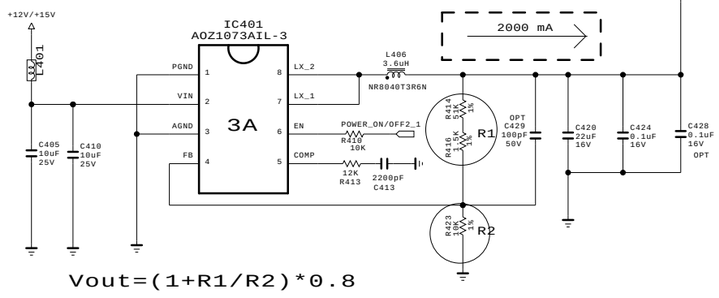

S7M core 1.26V volt

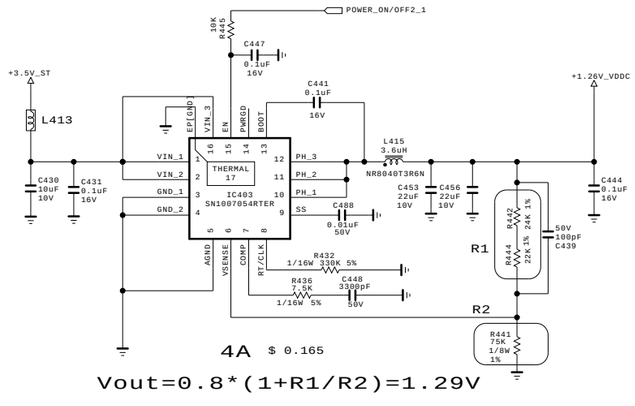

THE ⚠ SYMBOL MARK OF THIS SCHEMETIC DIAGRAM INCORPORATES SPECIAL FEATURES IMPORTANT FOR PROTECTION FROM X-RADIATION. FILRE AND ELECTRICAL SHOCK HAZARDS, WHEN SERVICING IF IS ESSENTIAL THAT ONLY MANUFATURES SPECFIED PARTS BE USED FOR THE CRITICAL COMPONENTS IN THE ⚠ SYMBOL MARK OF THE SCHEMETIC.

SECRET
LGElectronics

LG ELECTRONICS

MODEL	GP2R	DATE	20101023
BLOCK	POWER_LARGE	SHEET	4 /

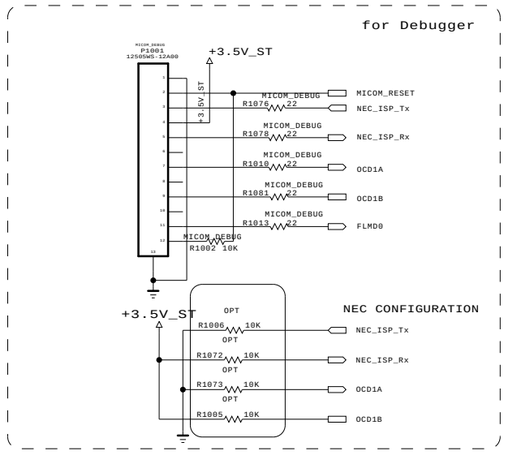

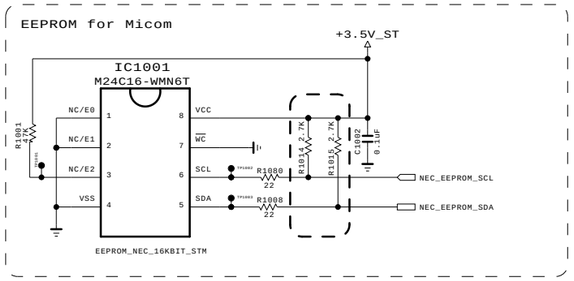

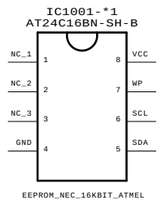

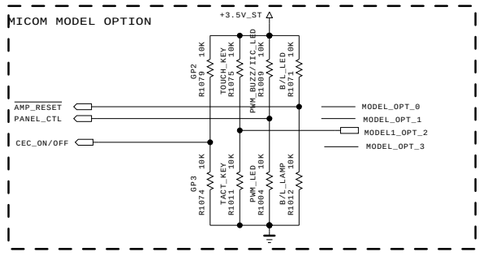

MODEL OPTION

PIN NAME	PIN NO.	HIGH	LOW
MODEL_OPT_0	8	B/L_LED	B/L_LAMP
MODEL_OPT_1	11	PWM_BUZZ/IIC_LED	PWM_LED
MODEL_OPT_2	30	TOUCH_KEY	TACT_KEY
MODEL_OPT_3	31	GP2	GP3

MODEL_OPT_0	MODEL_OPT_1	MODEL_OPT_2	MODEL_OPT_3	
LOW	LOW	LOW	LOW	LD350/450/550
HIGH	LOW	HIGH	LOW	19/22/26LE3300(5500)
HIGH	HIGH	HIGH	LOW	32/37/42/47/55LE5300(10)
LOW	HIGH	LOW	LOW	LD420
HIGH	HIGH	LOW	LOW	LE7300
	HIGH		HIGH	TBD

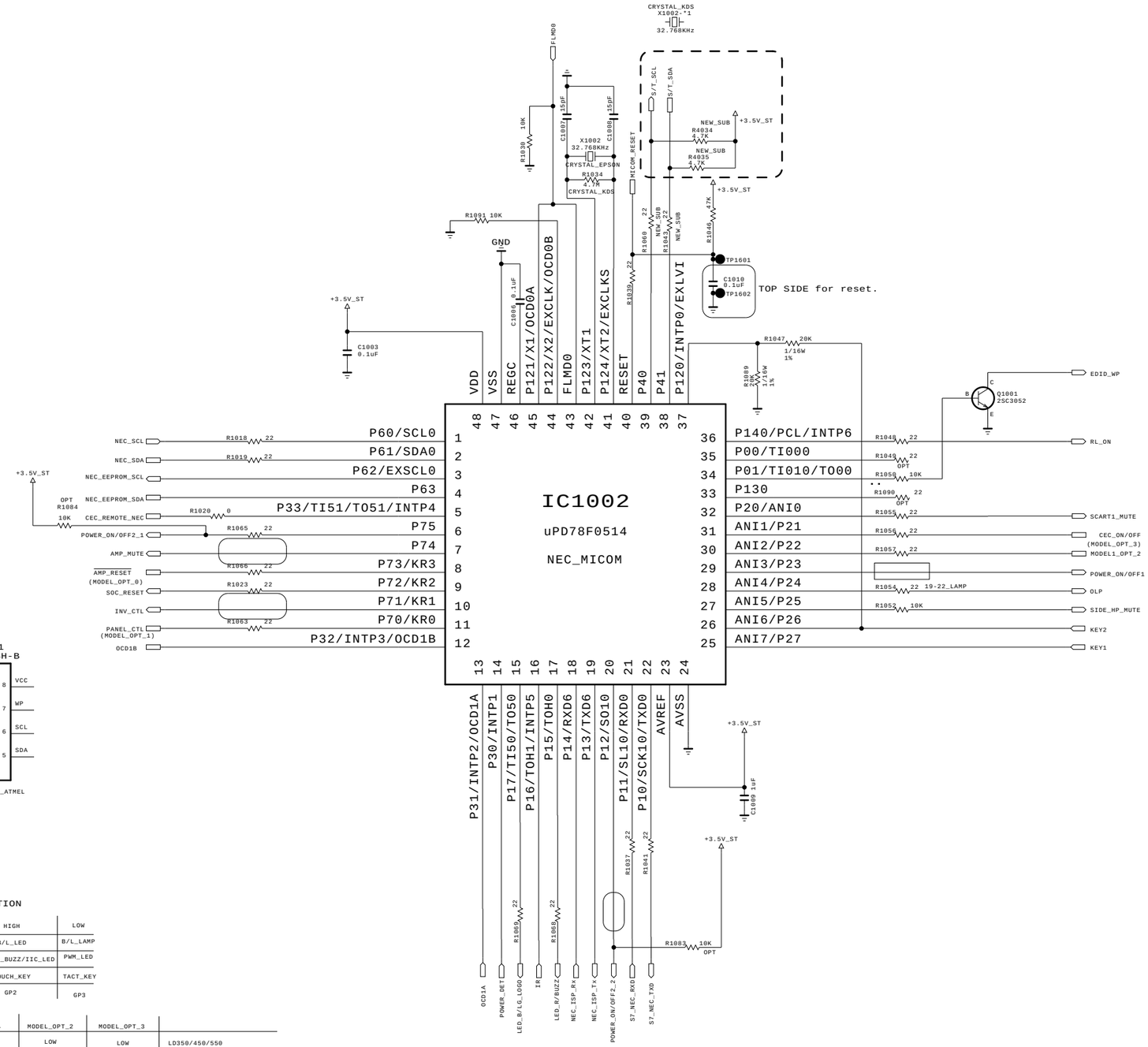

THE ⚠ SYMBOL MARK OF THIS SCHEMETIC DIAGRAM INCORPORATES SPECIAL FEATURES IMPORTANT FOR PROTECTION FROM X-RADIATION. FILRE AND ELECTRICAL SHOCK HAZARDS, WHEN SERVICING IF IS ESSENTIAL THAT ONLY MANUFATURES SPECFIED PARTS BE USED FOR THE CRITICAL COMPONENTS IN THE ⚠ SYMBOL MARK OF THE SCHEMETIC.

SECRET

LGElectronics

LG ELECTRONICS

MODEL	GP2R	DATE	20101023
BLOCK	MICOM	SHEET	5

CONTROL
IR & LED

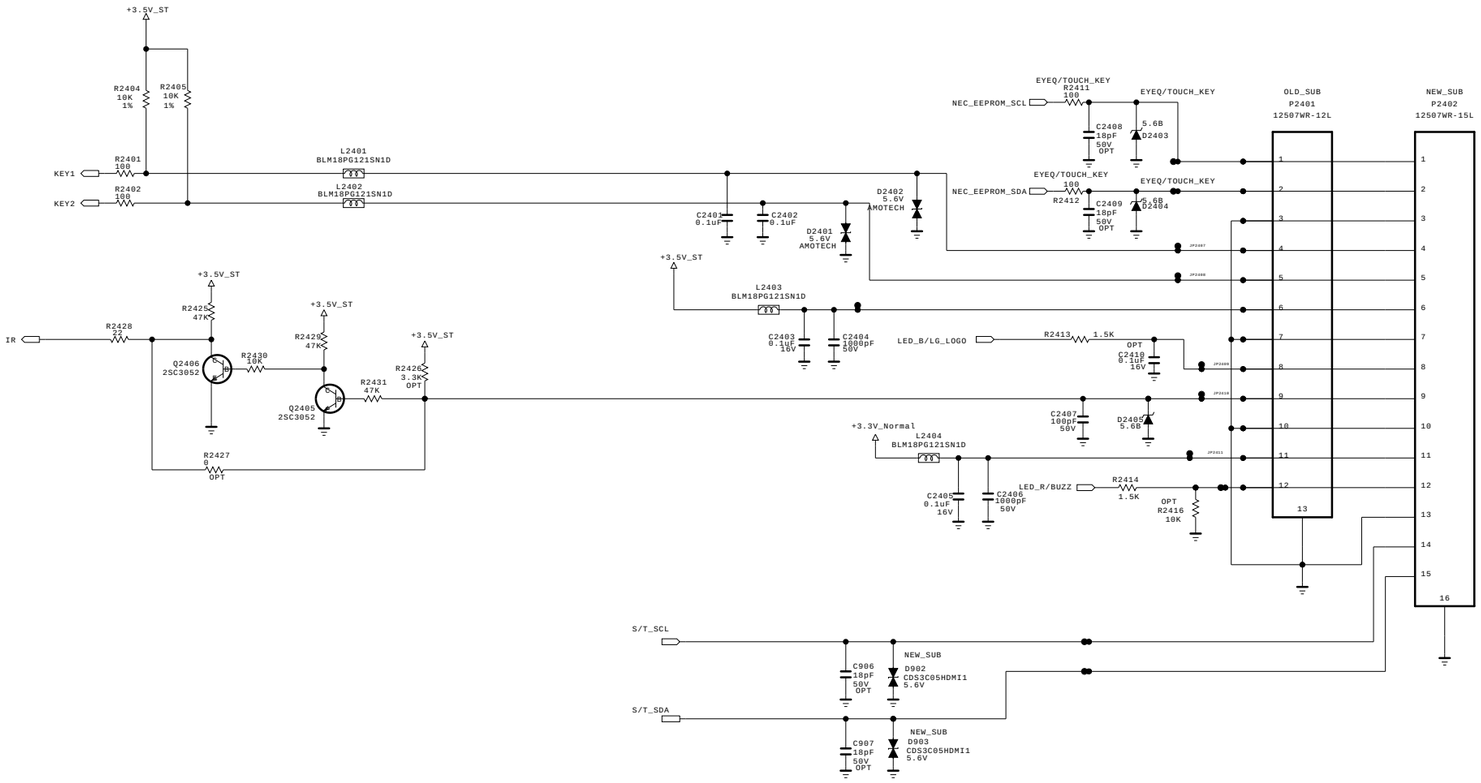

THE ⚠ SYMBOL MARK OF THIS SCHEMETIC DIAGRAM INCORPORATES SPECIAL FEATURES IMPORTANT FOR PROTECTION FROM X-RADIATION. FILRE AND ELECTRICAL SHOCK HAZARDS, WHEN SERVICING IF IS ESSENTIAL THAT ONLY MANUFATURES SPECFIED PARTS BE USED FOR THE CRITICAL COMPONENTS IN THE ⚠ SYMBOL MARK OF THE SCHEMETIC.

SECRET
LGElectronics

LG ELECTRONICS

MODEL	GP2R	DATE	20101023
BLOCK	IR/CONTROL-L	SHEET	6

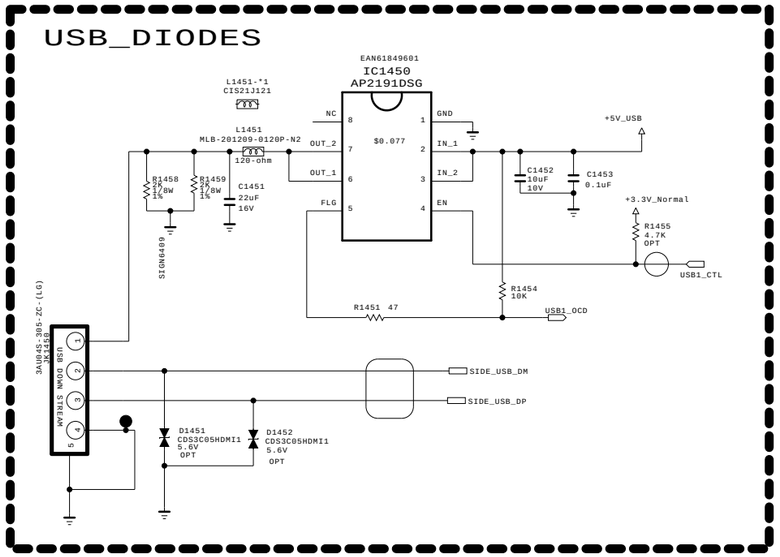

THE ⚠ SYMBOL MARK OF THIS SCHEMETIC DIAGRAM INCORPORATES SPECIAL FEATURES IMPORTANT FOR PROTECTION FROM X-RADIATION. FILRE AND ELECTRICAL SHOCK HAZARDS, WHEN SERVICING IF IS ESSENTIAL THAT ONLY MANUFATURES SPECFIED PARTS BE USED FOR THE CRITICAL COMPONENTS IN THE ⚠ SYMBOL MARK OF THE SCHEMETIC.

SECRET

LGElectronics

LG ELECTRONICS

MODEL	GP2R	DATE	20101023
BLOCK	USB_OCP_DIODE	SHEET	7 /

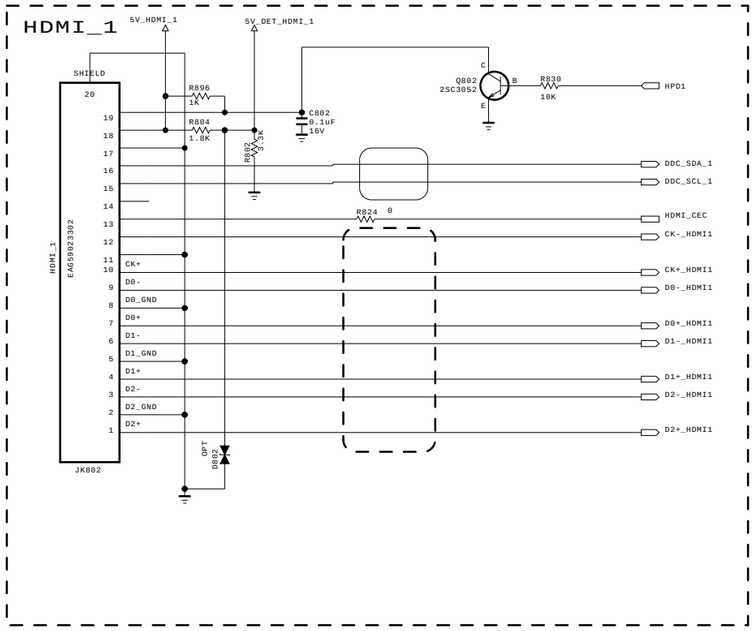

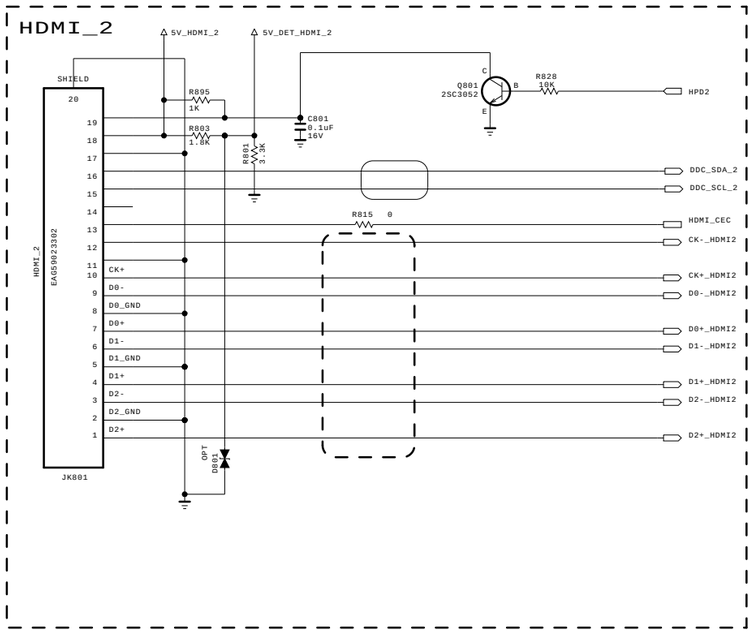

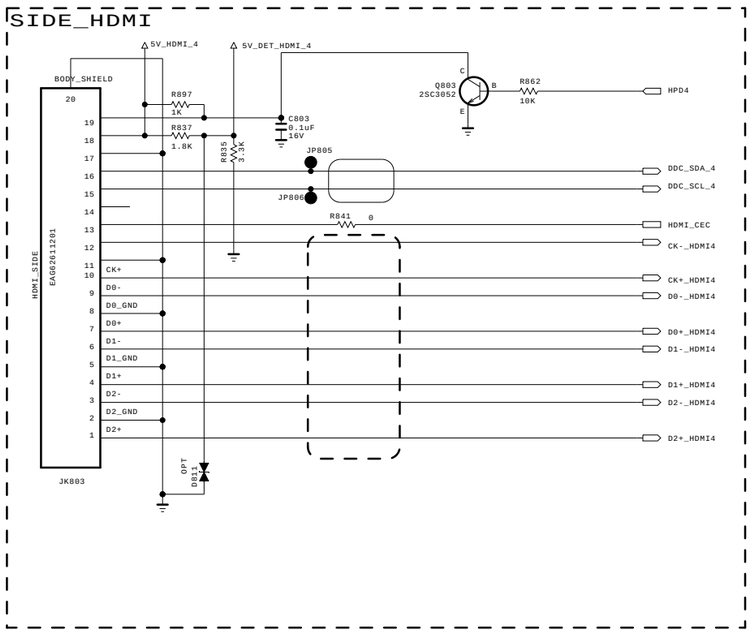

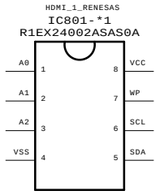

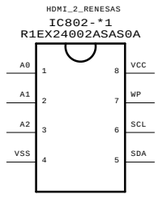

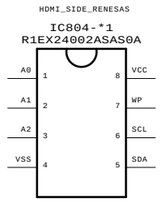

HDMI EEPROM

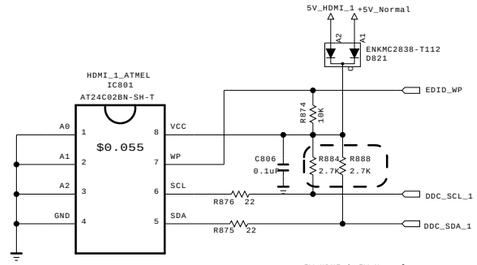

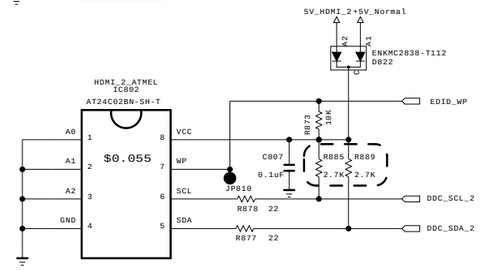

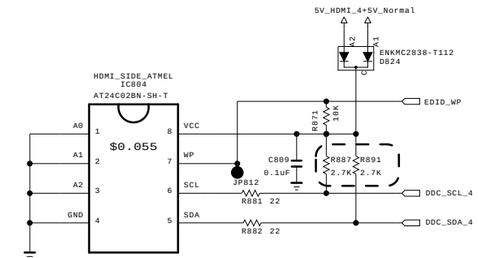

For CEC

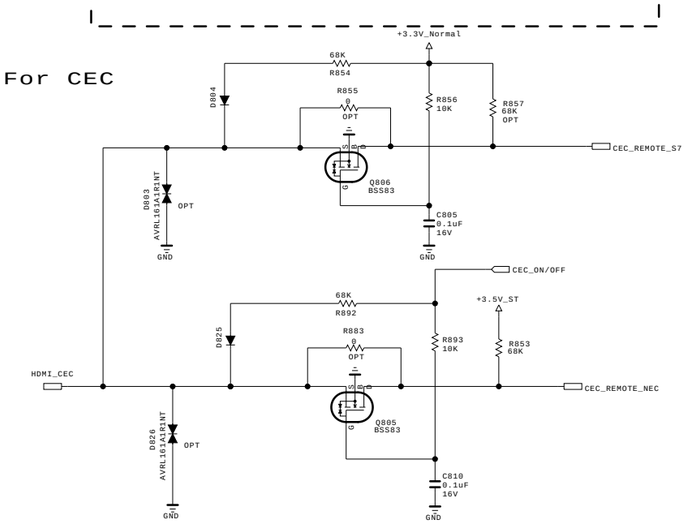

THE ⚠ SYMBOL MARK OF THIS SCHEMETIC DIAGRAM INCORPORATES SPECIAL FEATURES IMPORTANT FOR PROTECTION FROM X-RADIATION. FILRE AND ELECTRICAL SHOCK HAZARDS, WHEN SERVICING IF IS ESSENTIAL THAT ONLY MANUFATURES SPECFIED PARTS BE USED FOR THE CRITICAL COMPONENTS IN THE ⚠ SYMBOL MARK OF THE SCHEMETIC.

SECRET
LGElectronics

LG ELECTRONICS

MODEL	GP2R	DATE	20101023
BLOCK	HDMI	SHEET	8

RGB/SPDIF/PC/HP

New Item Development

EARPHONE BLOCK

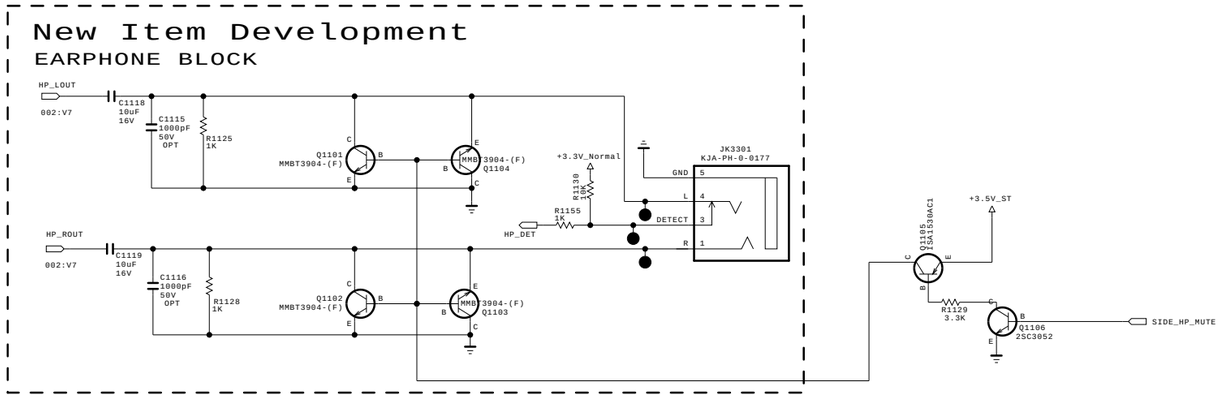

PC AUDIO

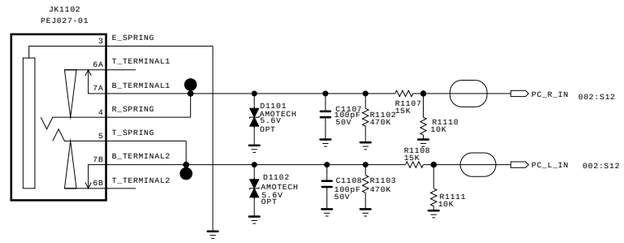

SPDIF OPTIC JACK

5.15 Mstar Circuit Application

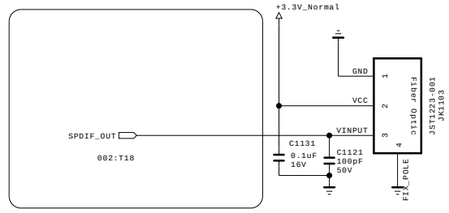

RGB PC

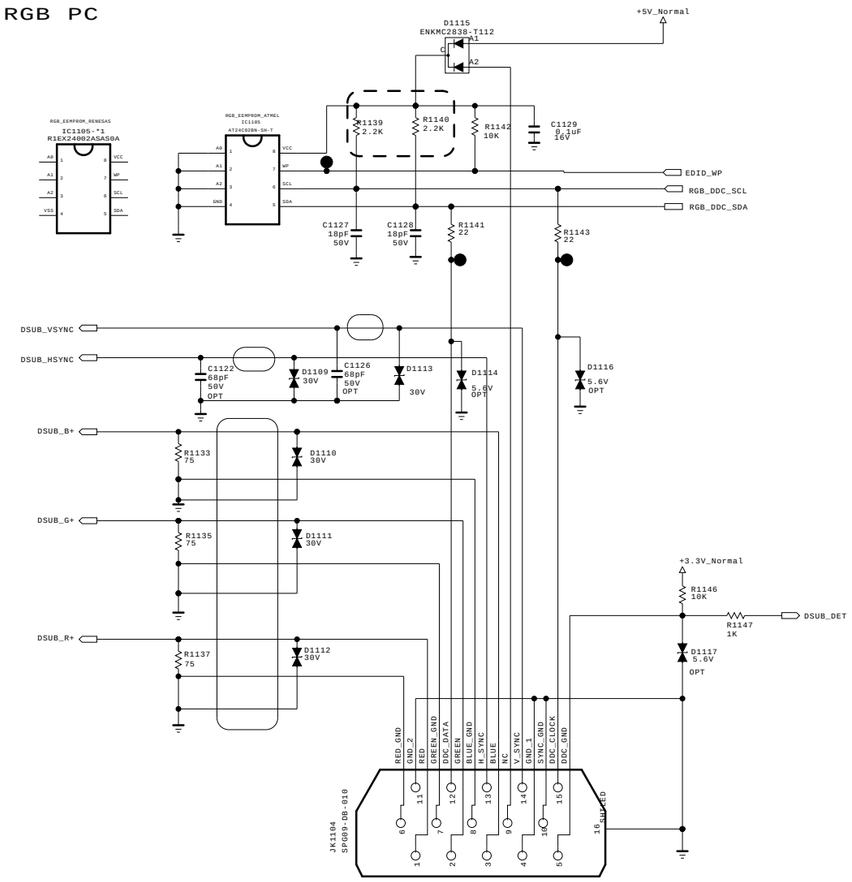

THE ⚠ SYMBOL MARK OF THIS SCHEMETIC DIAGRAM INCORPORATES SPECIAL FEATURES IMPORTANT FOR PROTECTION FROM X-RADIATION. FILRE AND ELECTRICAL SHOCK HAZARDS, WHEN SERVICING IF IS ESSENTIAL THAT ONLY MANUFATURES SPECFIED PARTS BE USED FOR THE CRITICAL COMPONENTS IN THE ⚠ SYMBOL MARK OF THE SCHEMETIC.

SECRET

LGElectronics

LG ELECTRONICS

MODEL	GP2R	DATE	20101023
BLOCK	RGB/SPDIF/HP	SHEET	9 /

RS232C

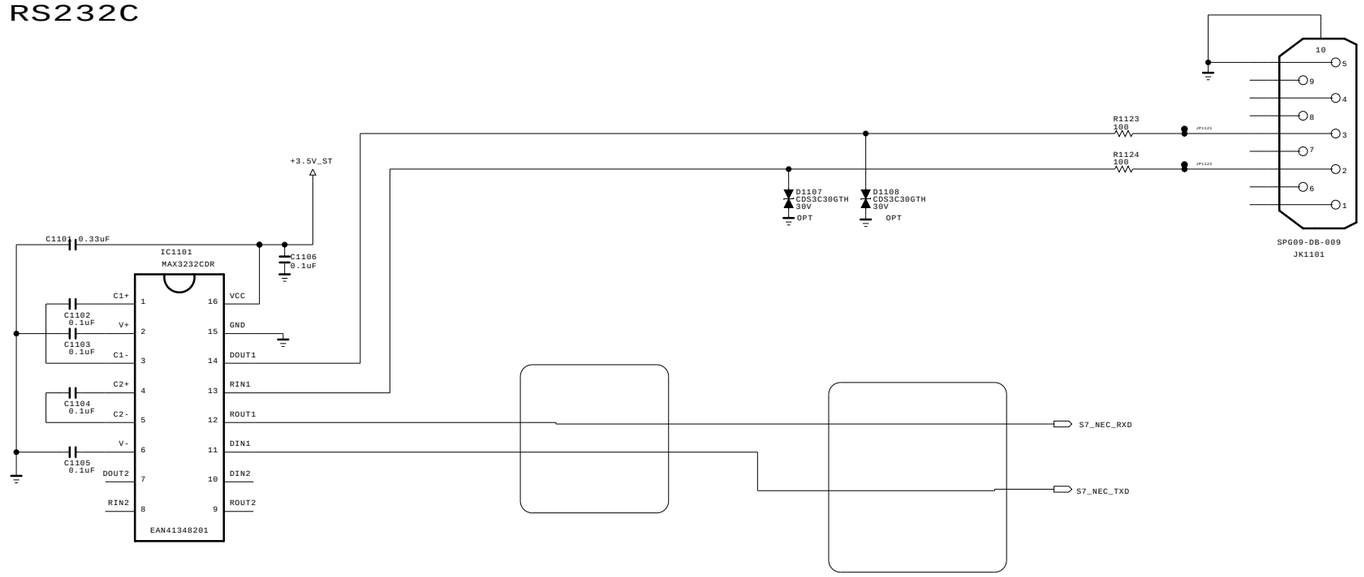

THE ⚠ SYMBOL MARK OF THIS SCHEMETIC DIAGRAM INCORPORATES SPECIAL FEATURES IMPORTANT FOR PROTECTION FROM X-RADIATION. FILRE AND ELECTRICAL SHOCK HAZARDS, WHEN SERVICING IF IS ESSENTIAL THAT ONLY MANUFATURES SPECFIED PARTS BE USED FOR THE CRITICAL COMPONENTS IN THE ⚠ SYMBOL MARK OF THE SCHEMETIC.

SECRET
LG Electronics

LG ELECTRONICS

MODEL	GP2R	DATE	20101023
BLOCK	RS232C_9PIN	SHEET	10 /

[51Pin LVDS Connector]
(For FHD 60/120Hz)

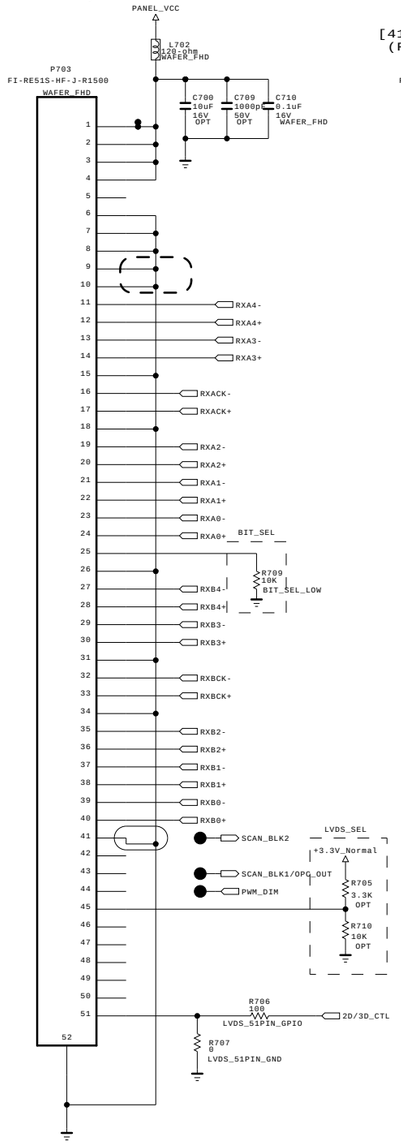

[41Pin LVDS Connector]
(For FHD 120Hz)

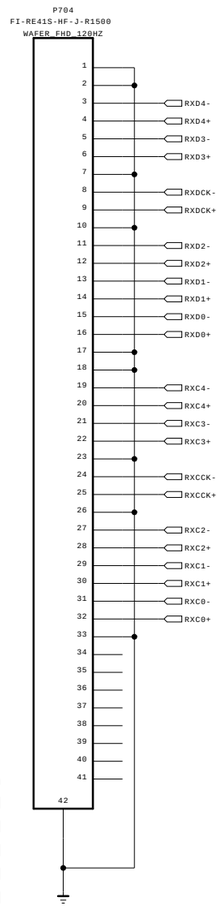

[30Pin LVDS Connector]
(For HD 60Hz_Normal)

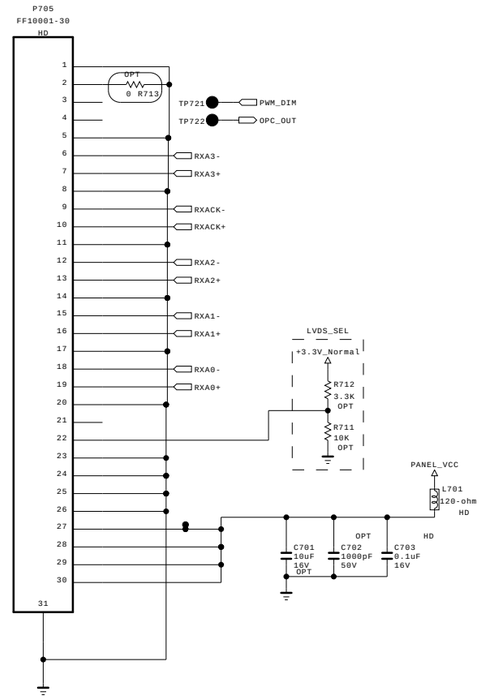

THE ⚠ SYMBOL MARK OF THIS SCHEMETIC DIAGRAM INCORPORATES SPECIAL FEATURES IMPORTANT FOR PROTECTION FROM X-RADIATION. FILRE AND ELECTRICAL SHOCK HAZARDS, WHEN SERVICING IF IS ESSENTIAL THAT ONLY MANUFATURES SPECFIED PARTS BE USED FOR THE CRITICAL COMPONENTS IN THE ⚠ SYMBOL MARK OF THE SCHEMETIC.

SECRET
LGElectronics

LG ELECTRONICS

MODEL	GP2R	DATE	20101023
BLOCK	LVDS_LARGE	SHEET	11

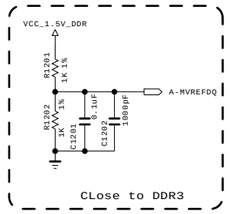

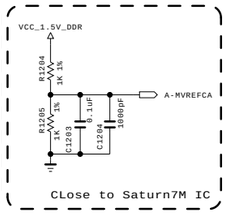

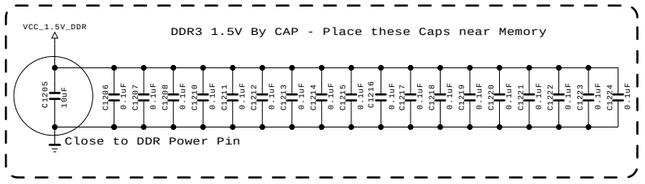

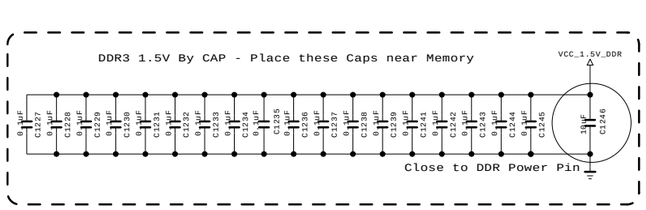

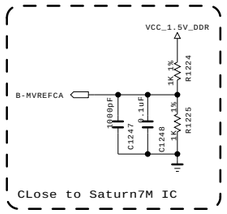

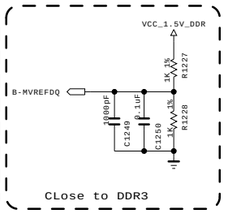

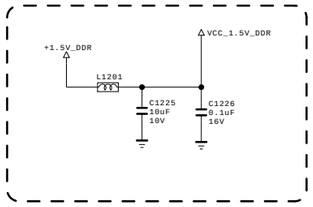

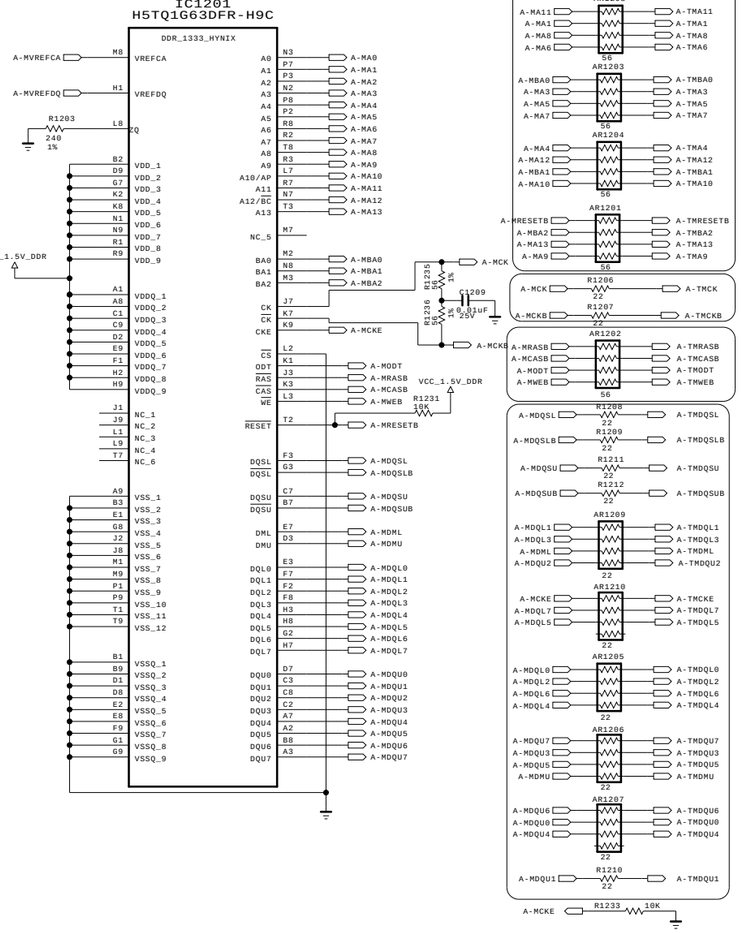

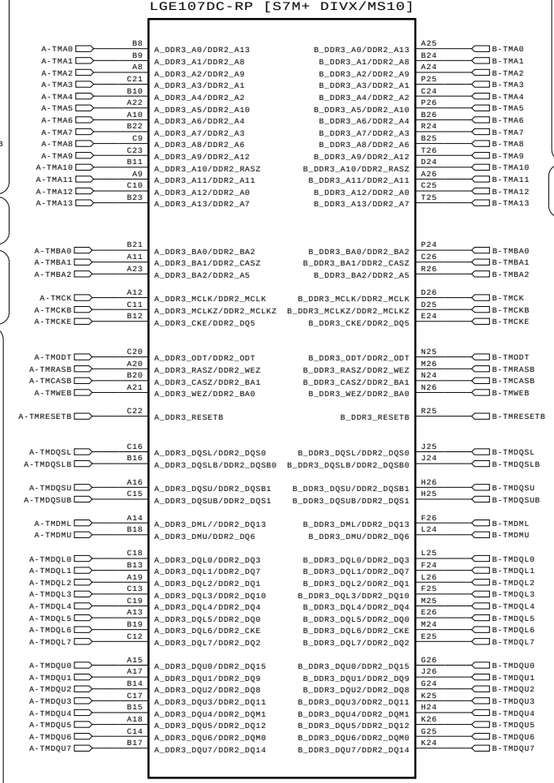

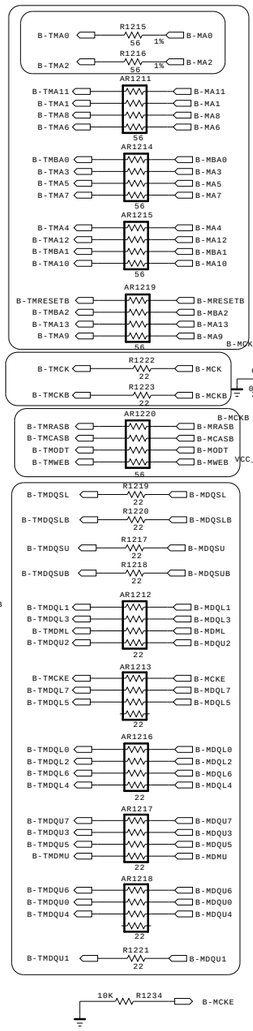

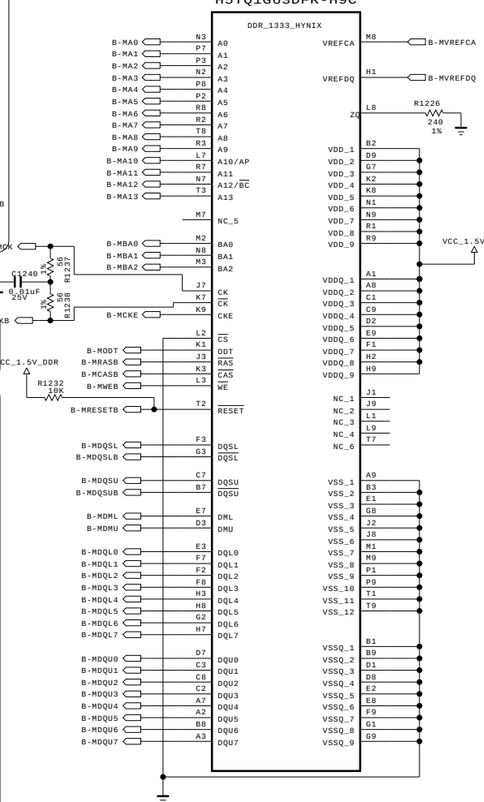

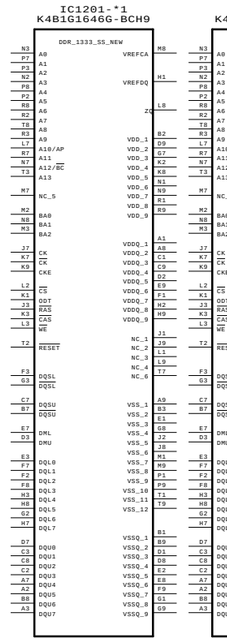

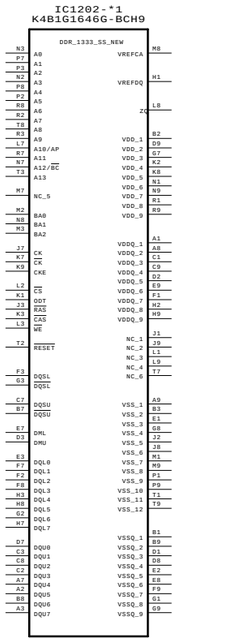

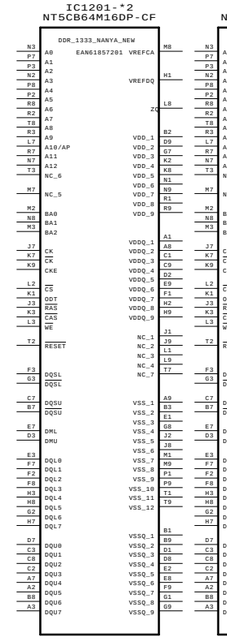

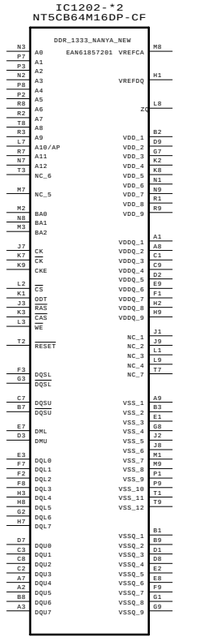

THE ⚠ SYMBOL MARK OF THIS SCHEMETIC DIAGRAM INCORPORATES SPECIAL FEATURES IMPORTANT FOR PROTECTION FROM X-RADIATION. FILRE AND ELECTRICAL SHOCK HAZARDS, WHEN SERVICING IF IS ESSENTIAL THAT ONLY MANUFATURES SPECFIED PARTS BE USED FOR THE CRITICAL COMPONENTS IN THE ⚠ SYMBOL MARK OF THE SCHEMETIC.

SECRET
LGElectronics

LG ELECTRONICS

MODEL	GP2R	DATE	20101023
BLOCK	DDR_256	SHEET	12 /

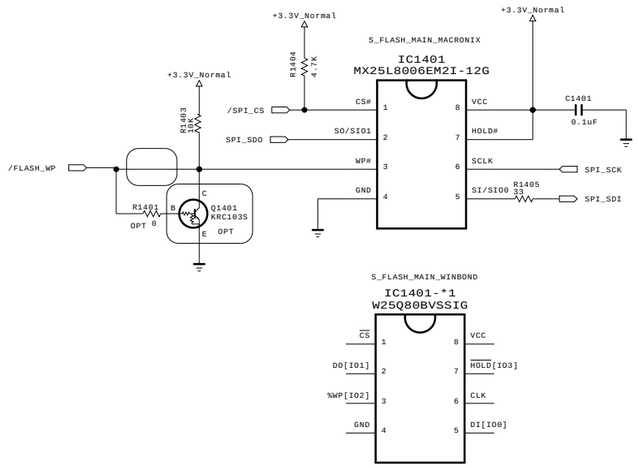

THE ⚠ SYMBOL MARK OF THIS SCHEMETIC DIAGRAM INCORPORATES SPECIAL FEATURES IMPORTANT FOR PROTECTION FROM X-RADIATION. FILRE AND ELECTRICAL SHOCK HAZARDS, WHEN SERVICING IF IS ESSENTIAL THAT ONLY MANUFATURES SPECFIED PARTS BE USED FOR THE CRITICAL COMPONENTS IN THE ⚠ SYMBOL MARK OF THE SCHEMETIC.

SECRET

LGElectronics

LG ELECTRONICS

MODEL	GP2R	DATE	20101023
BLOCK	SFLASH 1MB	SHEET	13 /

GP2R_LARGE_TUNER

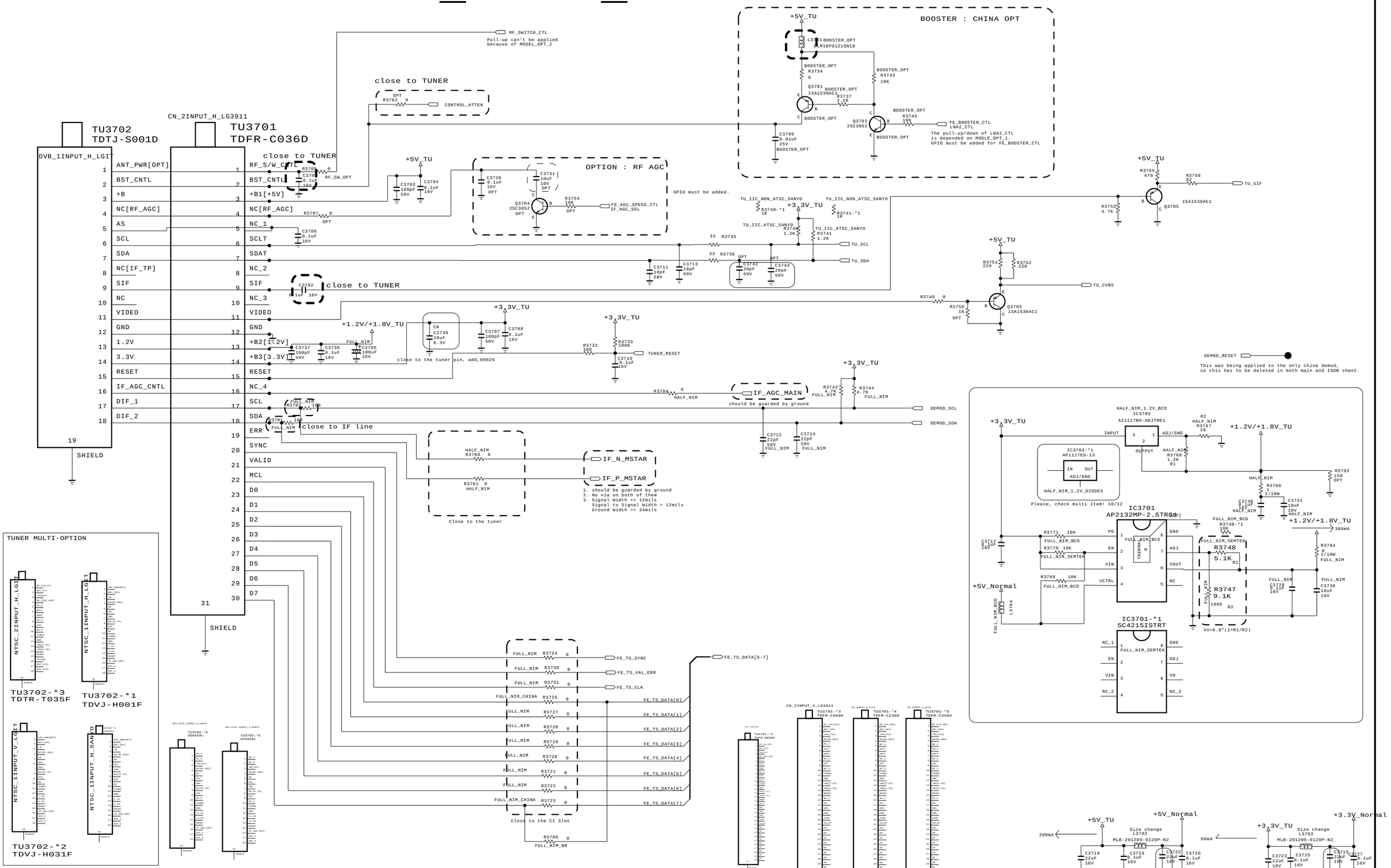

THE ⚠ SYMBOL MARK OF THIS SCHEMETIC DIAGRAM INCORPORATES SPECIAL FEATURES IMPORTANT FOR PROTECTION FROM X-RADIATION. FILRE AND ELECTRICAL SHOCK HAZARDS, WHEN SERVICING IF IS ESSENTIAL THAT ONLY MANUFATURES SPECFIED PARTS BE USED FOR THE CRITICAL COMPONENTS IN THE ⚠ SYMBOL MARK OF THE SCHEMETIC.

SECRET

LGElectronics

LG ELECTRONICS

MODEL	GP2R	DATE	20101023
BLOCK	TUNER_L	SHEET	14 /

WOOFER AMP

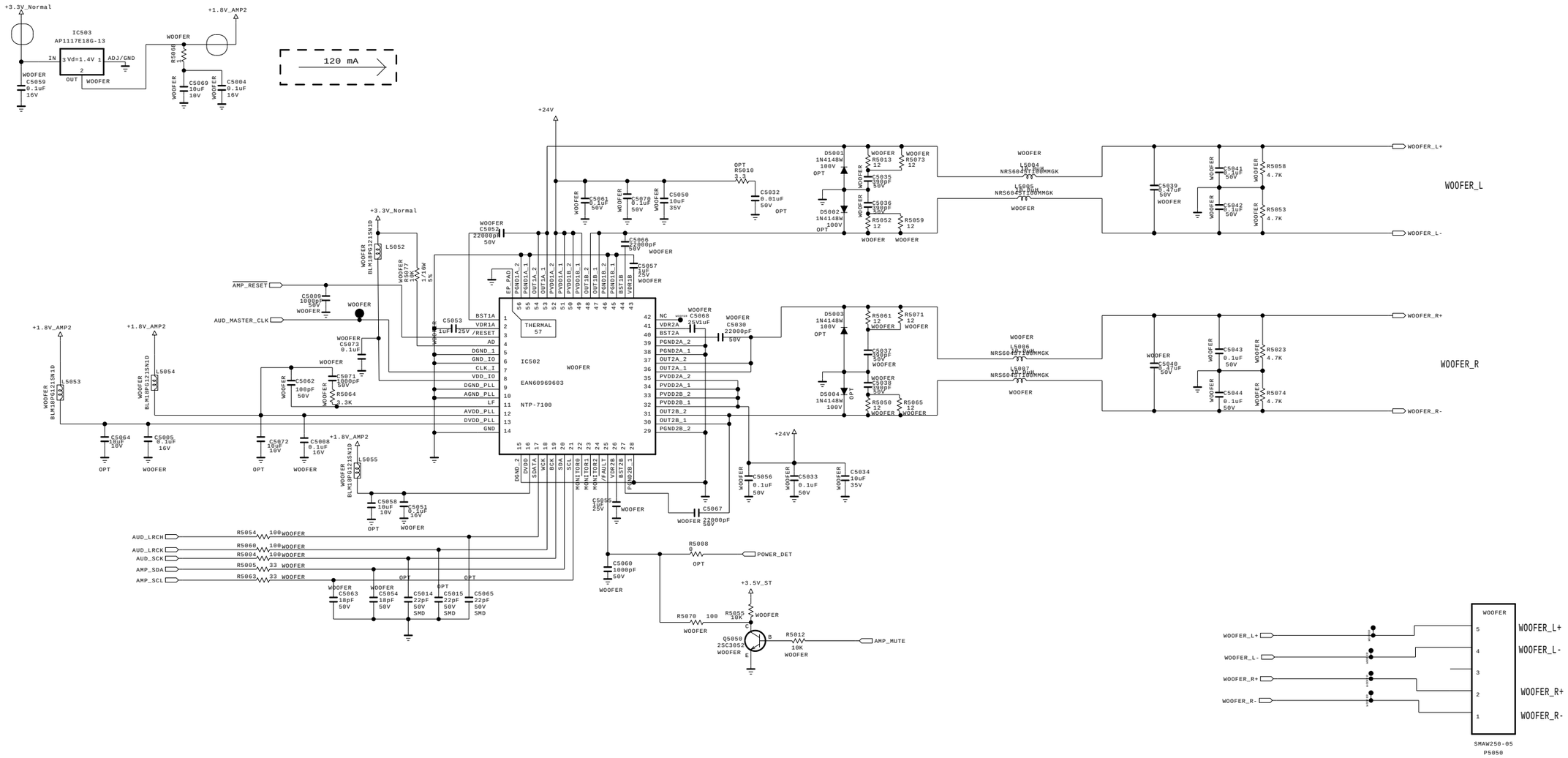

THE ⚠ SYMBOL MARK OF THIS SCHEMETIC DIAGRAM INCORPORATES SPECIAL FEATURES IMPORTANT FOR PROTECTION FROM X-RADIATION. FILRE AND ELECTRICAL SHOCK HAZARDS, WHEN SERVICING IF IS ESSENTIAL THAT ONLY MANUFATURES SPECFIED PARTS BE USED FOR THE CRITICAL COMPONENTS IN THE ⚠ SYMBOL MARK OF THE SCHEMETIC.

SECRET

LGElectronics

LG ELECTRONICS

MODEL	GP2R	DATE	20101023
BLOCK	WOOFER NTP	SHEET	15 /

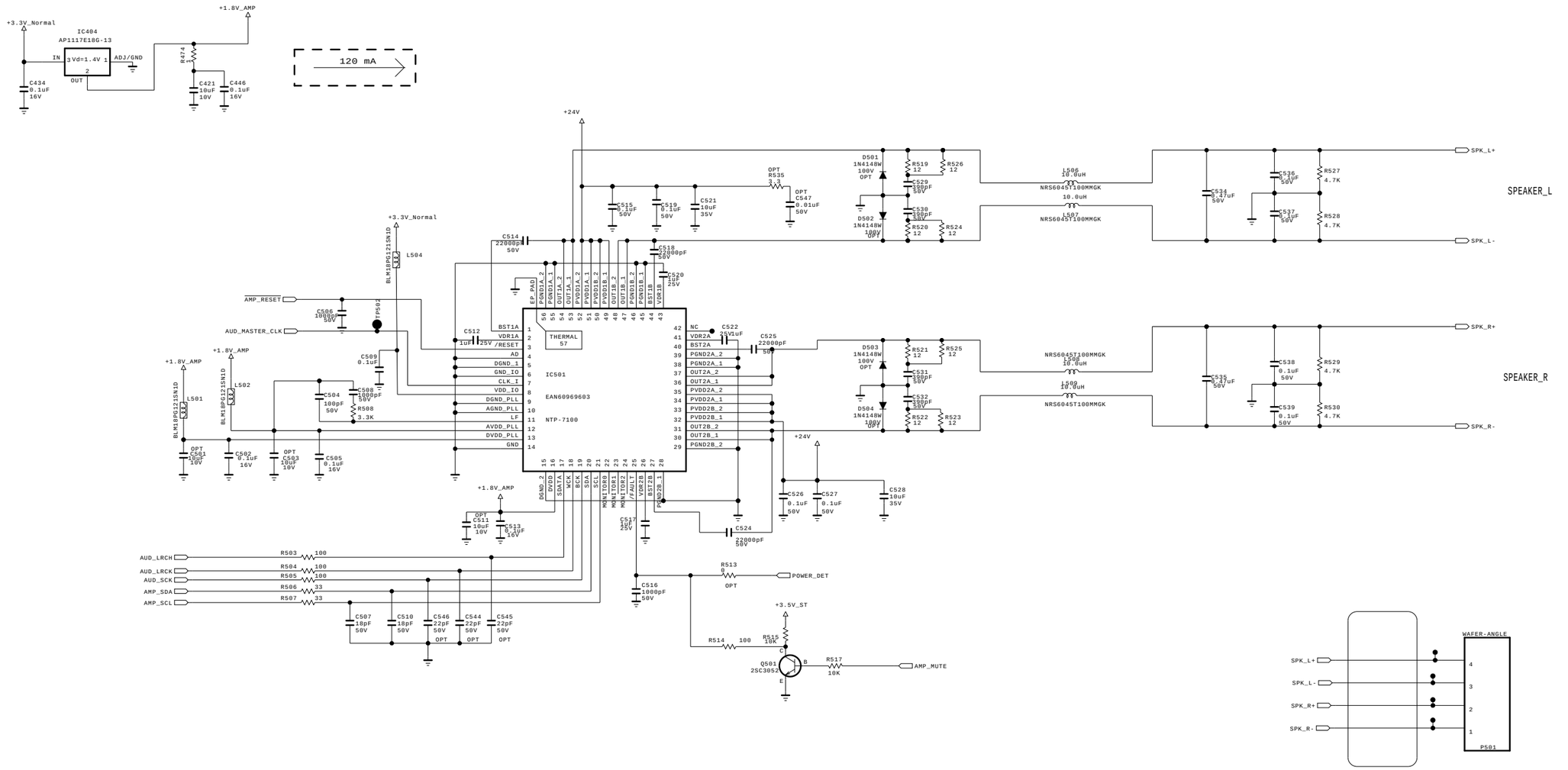

THE ⚠ SYMBOL MARK OF THIS SCHEMETIC DIAGRAM INCORPORATES SPECIAL FEATURES IMPORTANT FOR PROTECTION FROM X-RADIATION. FILRE AND ELECTRICAL SHOCK HAZARDS, WHEN SERVICING IF IS ESSENTIAL THAT ONLY MANUFATURES SPECFIED PARTS BE USED FOR THE CRITICAL COMPONENTS IN THE ⚠ SYMBOL MARK OF THE SCHEMETIC.

SECRET

LGElectronics

LG ELECTRONICS

MODEL	GP2R	DATE	20101023
BLOCK	AMP NTP	SHEET	16 /

Rear AV

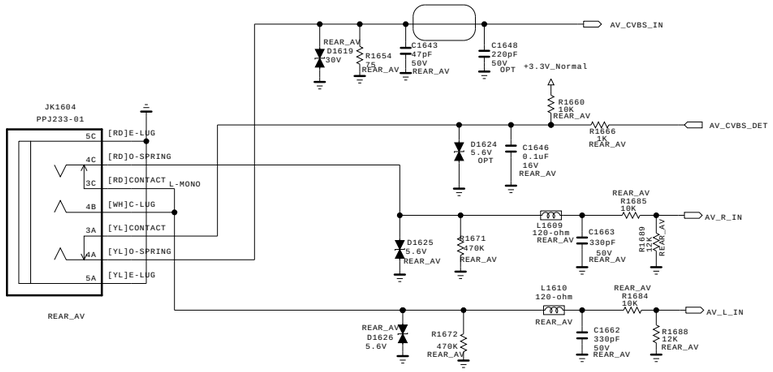

COMPONENT2

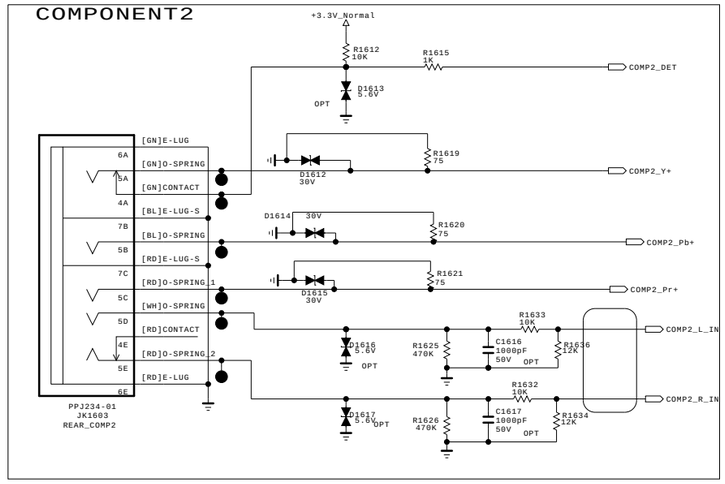

ETHERNET FOR DVB_T2

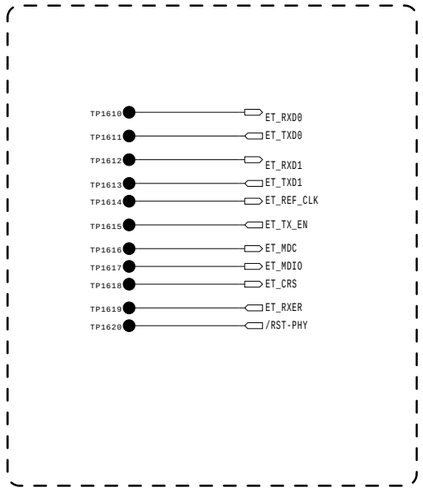

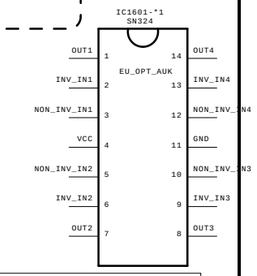

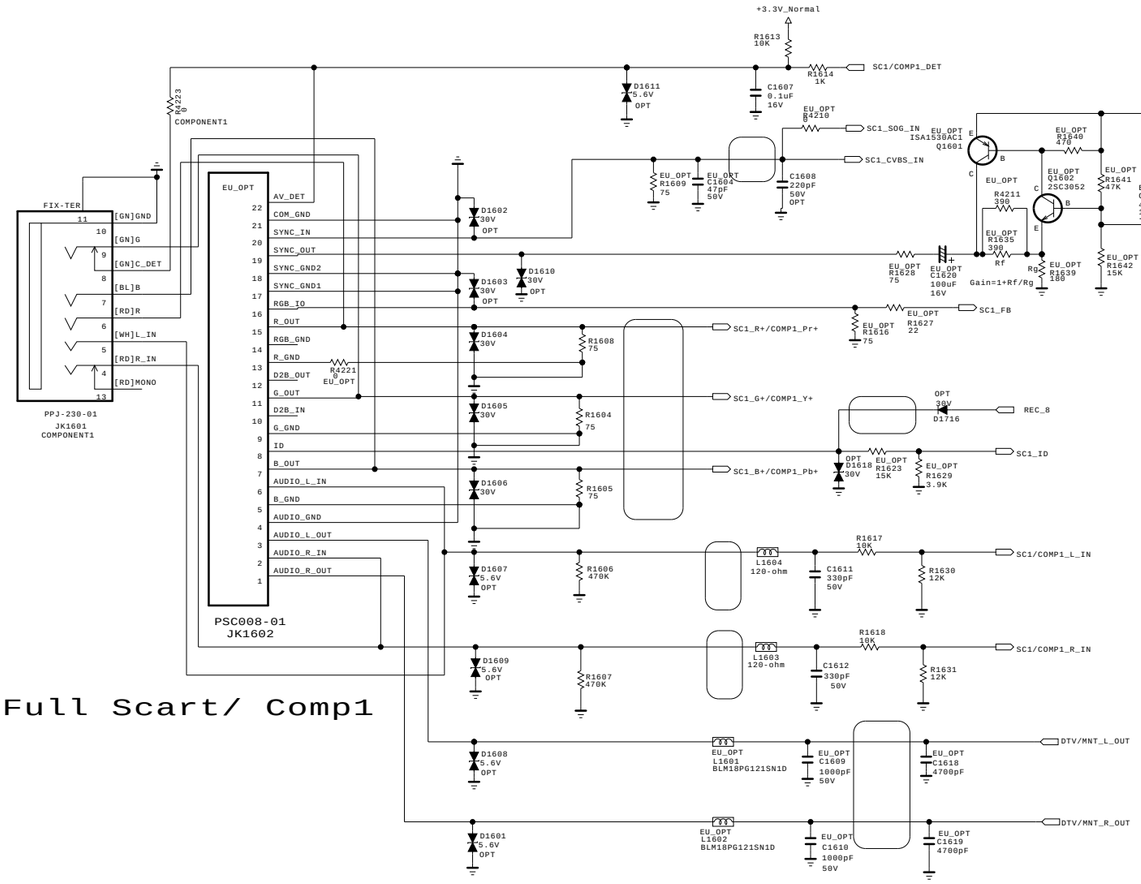

Full Scart/ Comp1

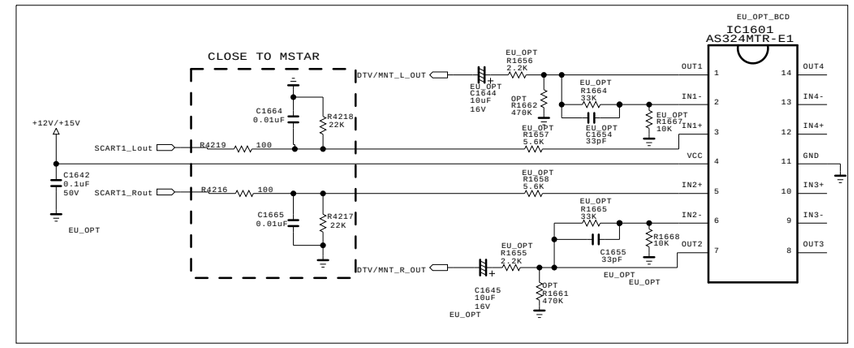

[SCART PIN 8]

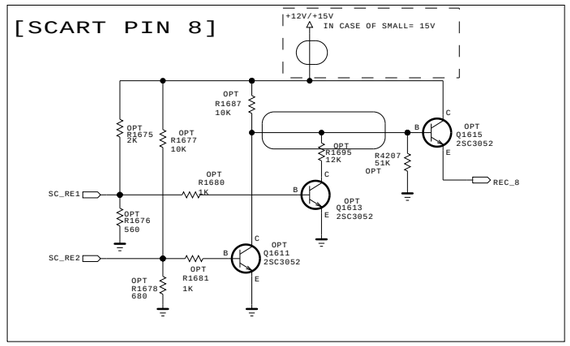

[SCART AUDIO MUTE]

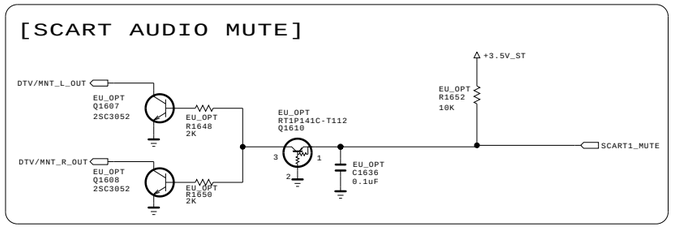

THE ⚠ SYMBOL MARK OF THIS SCHEMETIC DIAGRAM INCORPORATES SPECIAL FEATURES IMPORTANT FOR PROTECTION FROM X-RADIATION. FILRE AND ELECTRICAL SHOCK HAZARDS, WHEN SERVICING IF IS ESSENTIAL THAT ONLY MANUFATURES SPECFIED PARTS BE USED FOR THE CRITICAL COMPONENTS IN THE ⚠ SYMBOL MARK OF THE SCHEMETIC.

SECRET

LGElectronics

LG ELECTRONICS

MODEL	GP2R	DATE	20101023
BLOCK	REAR JACK	SHEET	17

SIDE CVBS PHONE JACK
(New Item Development)

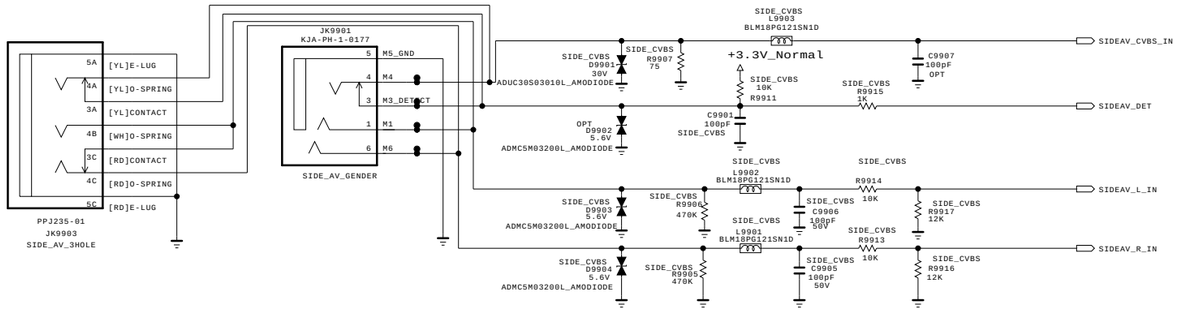

SIDE COMPONENT PHONE JACK
(New Item Developmen)

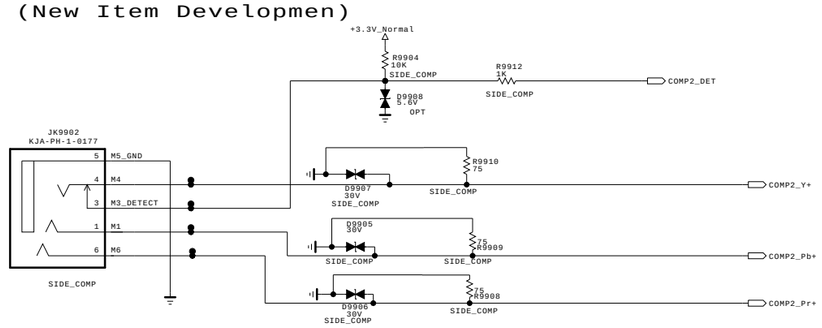

THE ⚠ SYMBOL MARK OF THIS SCHEMETIC DIAGRAM INCORPORATES SPECIAL FEATURES IMPORTANT FOR PROTECTION FROM X-RADIATION. FILRE AND ELECTRICAL SHOCK HAZARDS, WHEN SERVICING IF IS ESSENTIAL THAT ONLY MANUFATURES SPECFIED PARTS BE USED FOR THE CRITICAL COMPONENTS IN THE ⚠ SYMBOL MARK OF THE SCHEMETIC.

SECRET
LGElectronics

LG ELECTRONICS

MODEL	GP2R	DATE	20101023
BLOCK	SIDE_JACK	SHEET	18 /

CI Region

* Option name of this page : CI_SLOT (because of Hong Kong)

CI SLOT

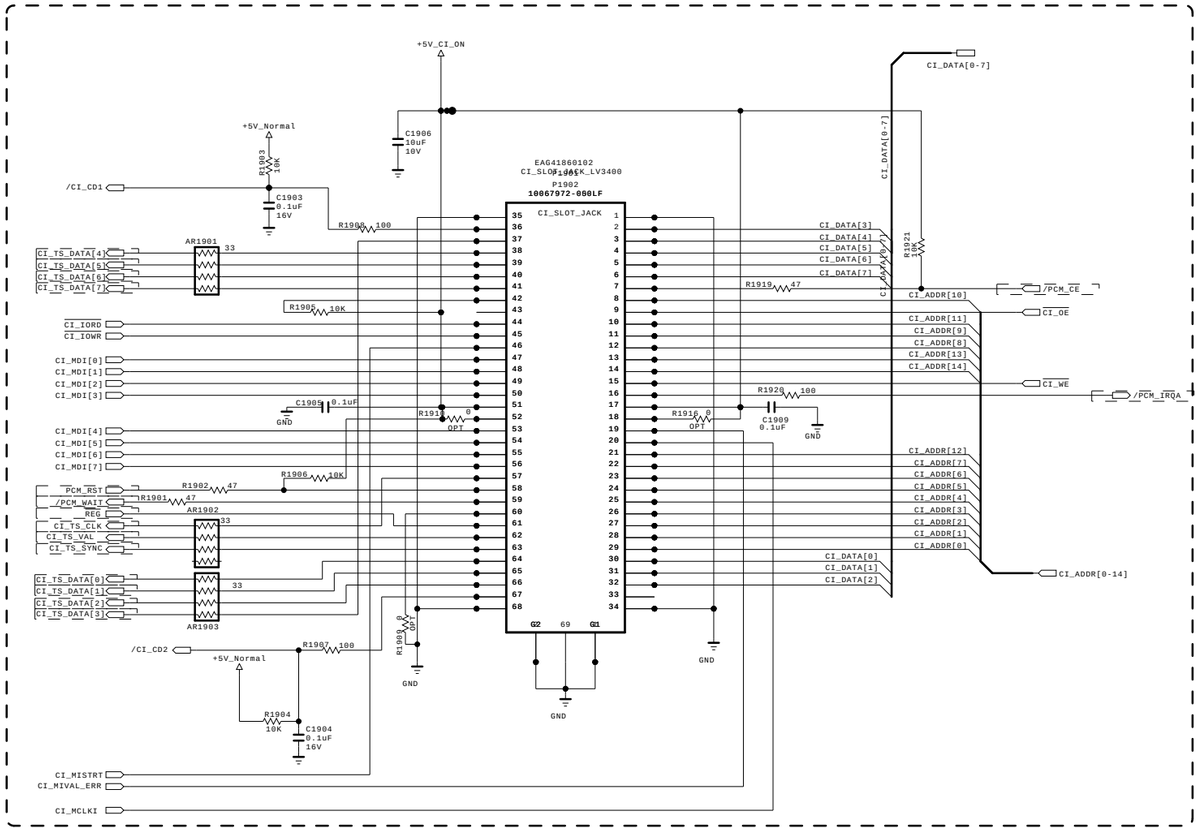

CI TS INPUT

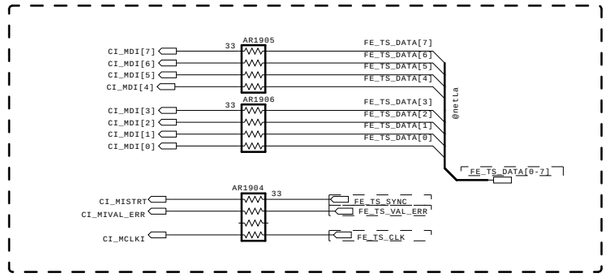

CI HOST I/F

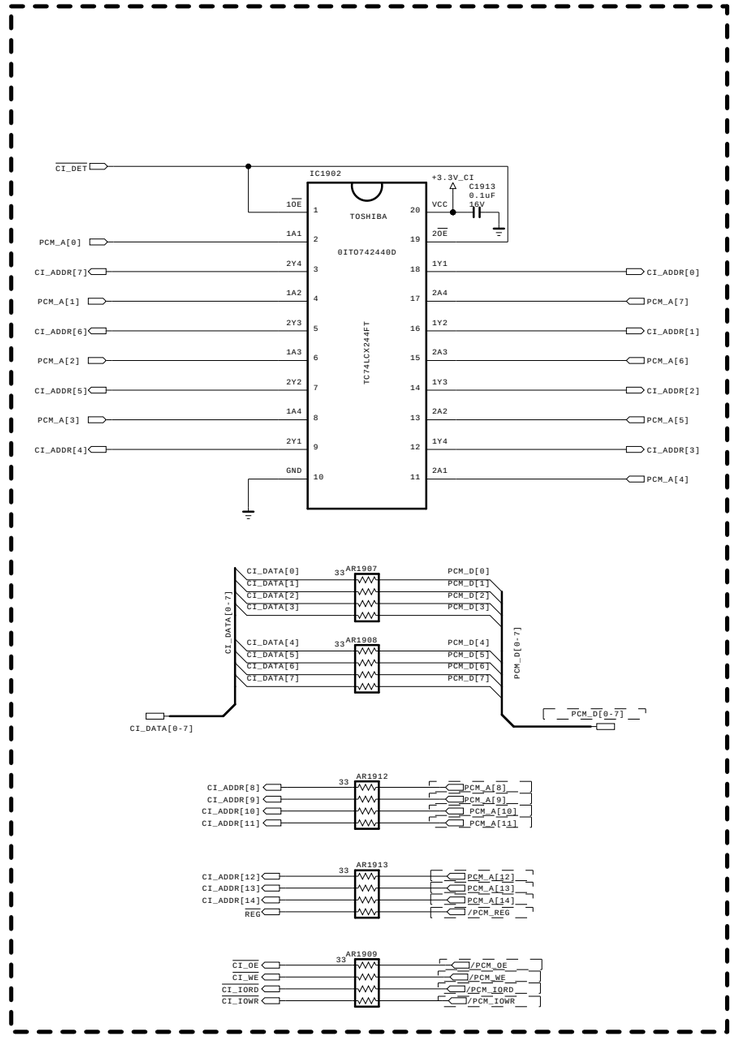

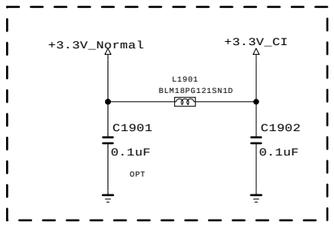

CI DETECT

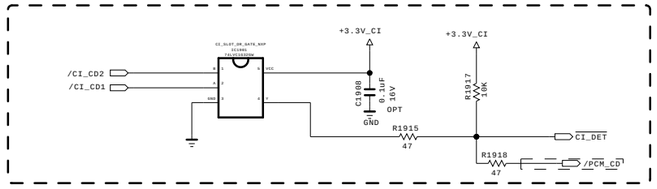

CI POWER ENABLE CONTROL

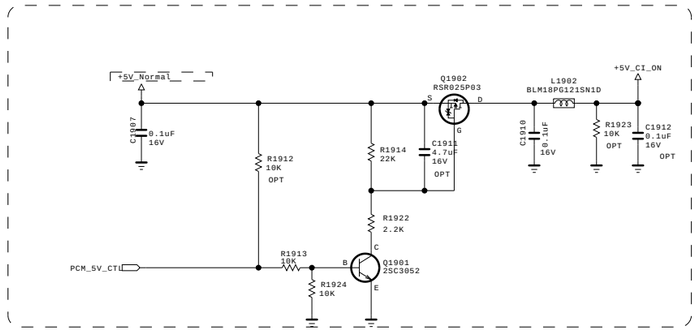

THE ⚠ SYMBOL MARK OF THIS SCHEMETIC DIAGRAM INCORPORATES SPECIAL FEATURES IMPORTANT FOR PROTECTION FROM X-RADIATION. FILRE AND ELECTRICAL SHOCK HAZARDS, WHEN SERVICING IF IS ESSENTIAL THAT ONLY MANUFATURES SPECFIED PARTS BE USED FOR THE CRITICAL COMPONENTS IN THE ⚠ SYMBOL MARK OF THE SCHEMETIC.

SECRET
LGElectronics

LG ELECTRONICS

MODEL	GP2R	DATE	20101023
BLOCK	PCMCI	SHEET	20

SMD GASKET

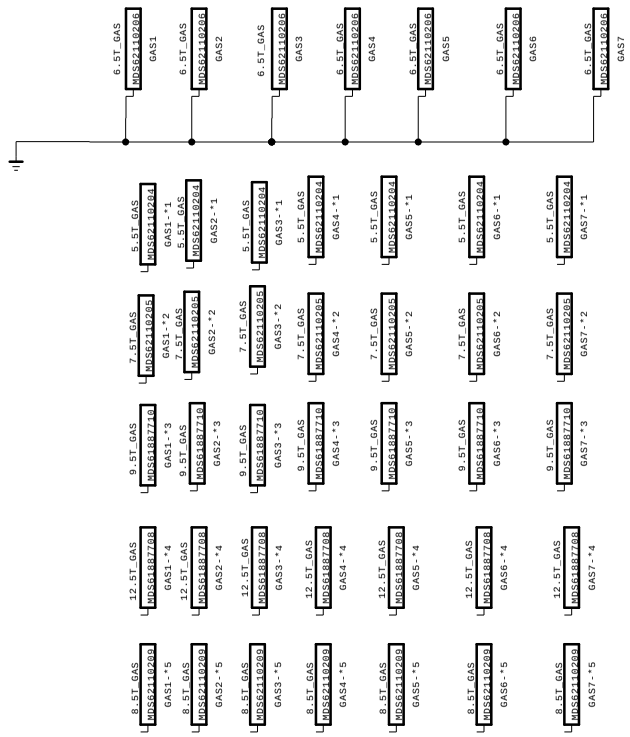

THE ⚠ SYMBOL MARK OF THIS SCHEMETIC DIAGRAM INCORPORATES SPECIAL FEATURES IMPORTANT FOR PROTECTION FROM X-RADIATION. FILRE AND ELECTRICAL SHOCK HAZARDS, WHEN SERVICING IF IS ESSENTIAL THAT ONLY MANUFATURES SPECFIED PARTS BE USED FOR THE CRITICAL COMPONENTS IN THE ⚠ SYMBOL MARK OF THE SCHEMETIC.

SECRET
LGElectronics

LG ELECTRONICS

MODEL	GP2R	DATE	20101023
BLOCK	SMD_GAS	SHEET	20 /

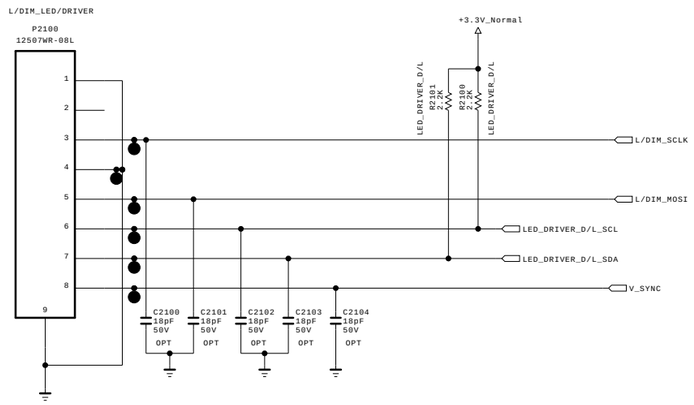

THE ⚠ SYMBOL MARK OF THIS SCHEMETIC DIAGRAM INCORPORATES SPECIAL FEATURES IMPORTANT FOR PROTECTION FROM X-RADIATION. FILRE AND ELECTRICAL SHOCK HAZARDS, WHEN SERVICING IF IS ESSENTIAL THAT ONLY MANUFATURES SPECFIED PARTS BE USED FOR THE CRITICAL COMPONENTS IN THE ⚠ SYMBOL MARK OF THE SCHEMETIC.

SECRET

LGElectronics

LG ELECTRONICS

MODEL	GP2R	DATE	20101023
BLOCK	L/DIM_LED	SHEET	21 /

LG Electronics Inc.

S7M-PLUS_DivX_MS10

LGE107DC-RP [S7M+ DIVX/MS10]

NAND FLASH MEMORY

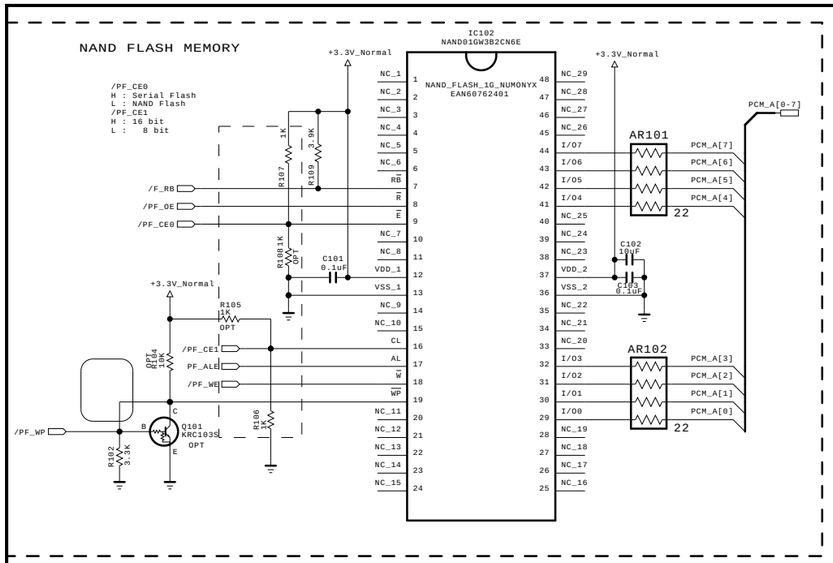

<T3 CHIP Config(AUD_LRCH)>

Boot from SPI flash : 1'b0
Boot from NOR flash : 1'b1

<T3 CHIP Config>
(AUD_SCK, AUD_MASTER_CLK, PWM1, PWM0)

MIPS_no_EJ_NOR8 : 4'h3 (MIPS as host. No EJ PAD. Byte mode NAND flash.)
MIPS_EJ1_NOR8 : 4'h4 (MIPS as host. EJ use PAD1. Byte mode NAND flash.)
MIPS_EJ2_NOR8 : 4'h5 (MIPS as host. EJ use PAD2. Byte mode NAND flash.)
B51_Secure_no scramble : 4'hb (8051 as host. Internal SPI flash secure boot, no scramble)
B51_Sesure_scramble : 4'hc (8051 as host. Internal SPI flash secure boot with scarmble)

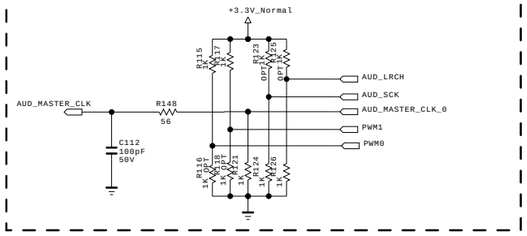

IC101

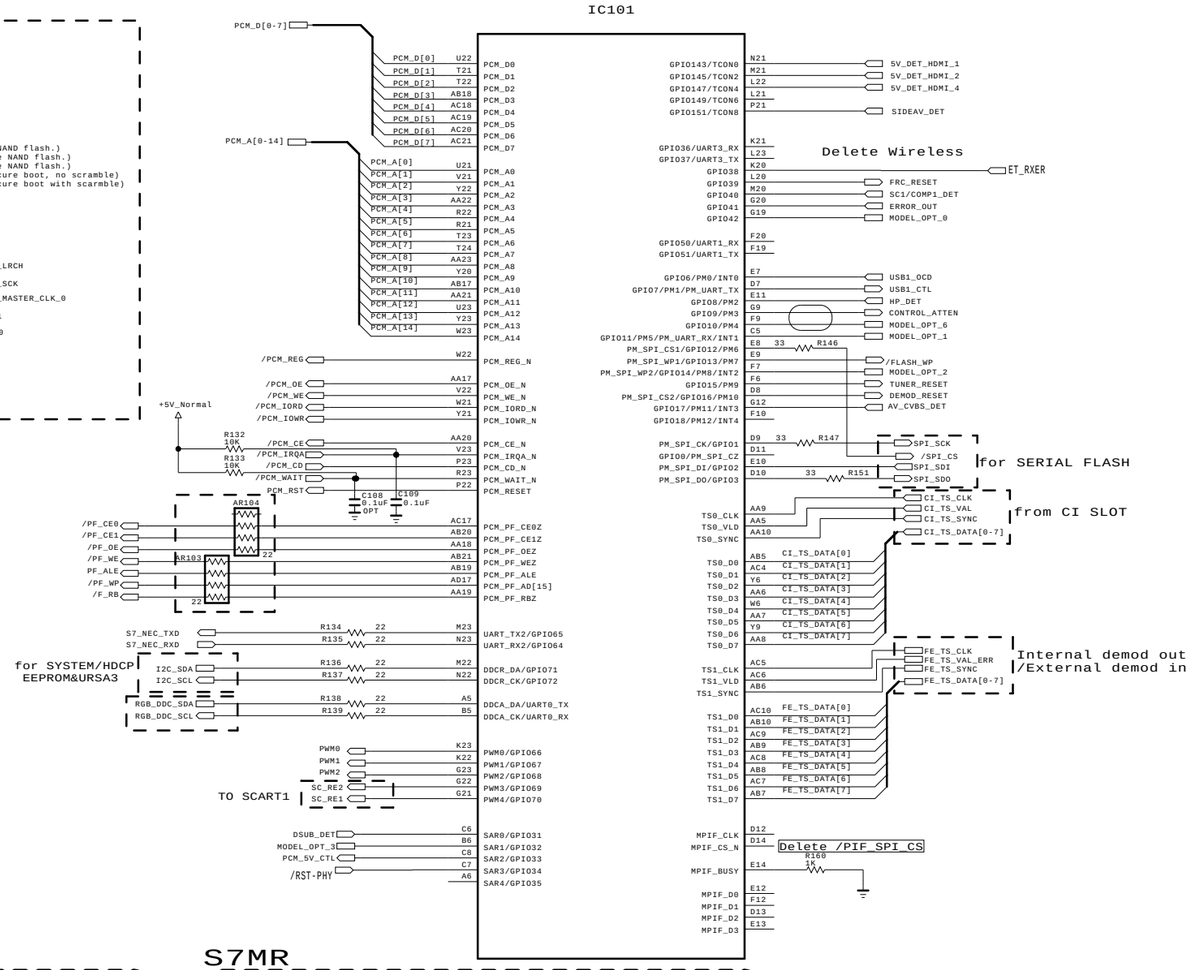

NAND_FLASH_1G_HYNIX

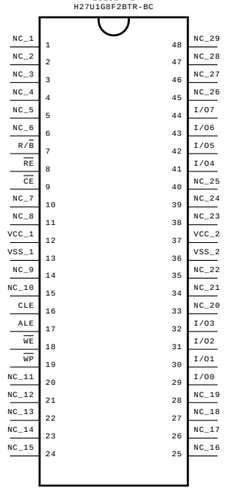

NAND_FLASH_1G_SS

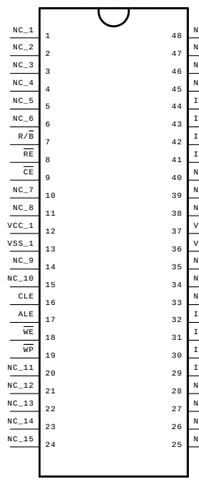

NAND_FLASH_1G_TOSHIBA

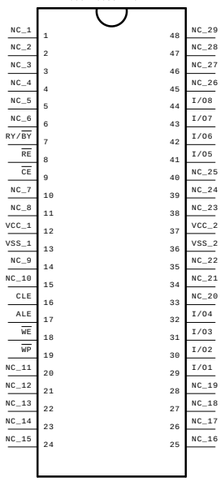

S7R

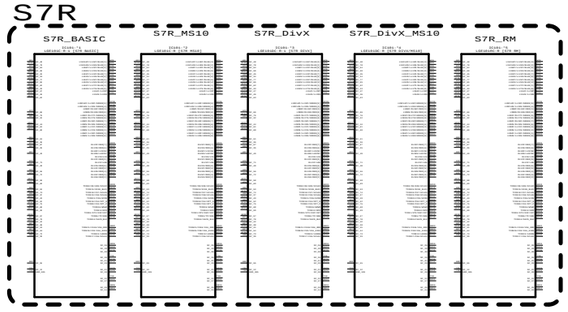

S7MR

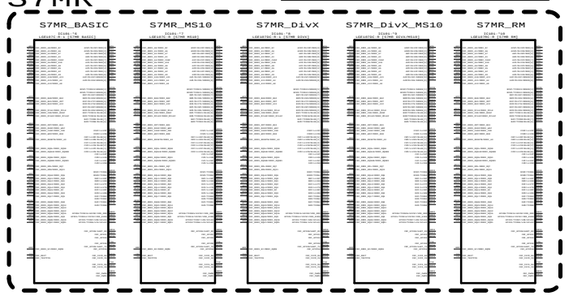

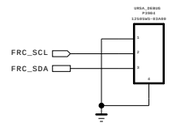

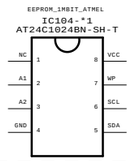

S7MR-PLUS

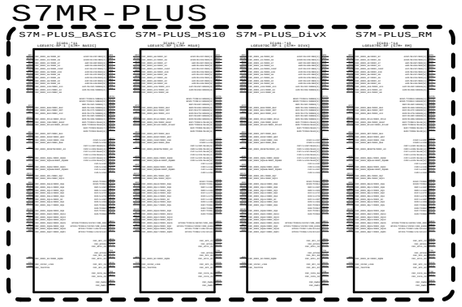

HDCP EEPROM

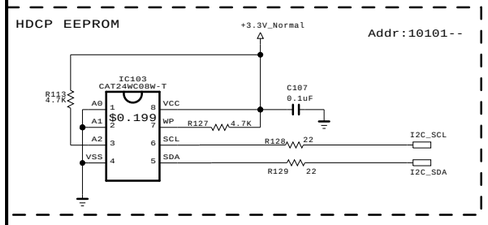

EEPROM

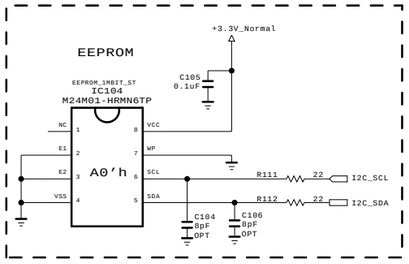

I2C

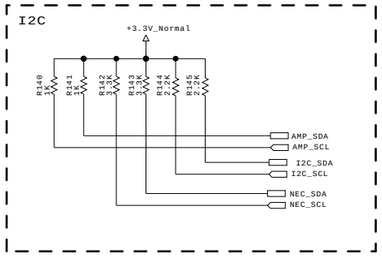

DIMMING

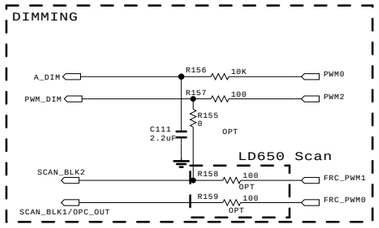

THE ⚠ SYMBOL MARK OF THIS SCHEMETIC DIAGRAM INCORPORATES SPECIAL FEATURES IMPORTANT FOR PROTECTION FROM X-RADIATION. FILRE AND ELECTRICAL SHOCK HAZARDS, WHEN SERVICING IF IS ESSENTIAL THAT ONLY MANUFATURES SPECFIED PARTS BE USED FOR THE CRITICAL COMPONENTS IN THE ⚠ SYMBOL MARK OF THE SCHEMETIC.

SECRET

LGElectronics

LG ELECTRONICS

MODEL	GP3_Saturn7M	DATE	Ver. 0.1
BLOCK	FLASH/EEPROM/GPIO	SHEET	1

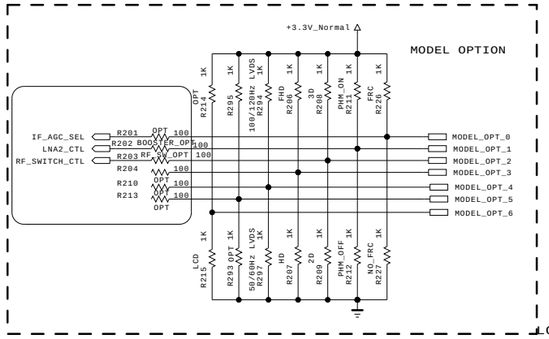

MODEL OPTION

PIN NAME	PIN NO.	LOW	HIGH
MODEL_OPT_0	G19	NO FRC	FRC
MODEL_OPT_4	E18	50/60Hz LVDS	100/120Hz LVDS
MODEL_OPT_1	C5	PHM_OFF	PHM_ON
MODEL_OPT_2	F7	2D	3D
MODEL_OPT_3	B6	HD	FHD
MODEL_OPT_5	D18	Ready	default
MODEL_OPT_6	F9	LCD	OLED

NO_FRC
U3_INTERNAL
US_EXTERNALBOOT
reserved for FRC

OPT_0	OPT_4
: LOW	LOW
: HIGH	LOW
:HIGH	HIGH
: LOW	HIGH

--> This option is only applied in EU.
In case of NON_EU, default value set LOW.

-->In case of GP2, This port was used for GIP/NON_GIP

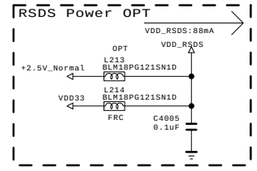

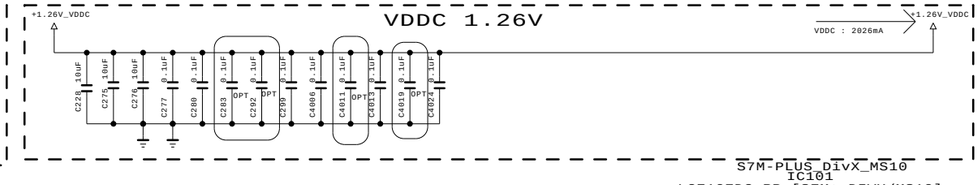

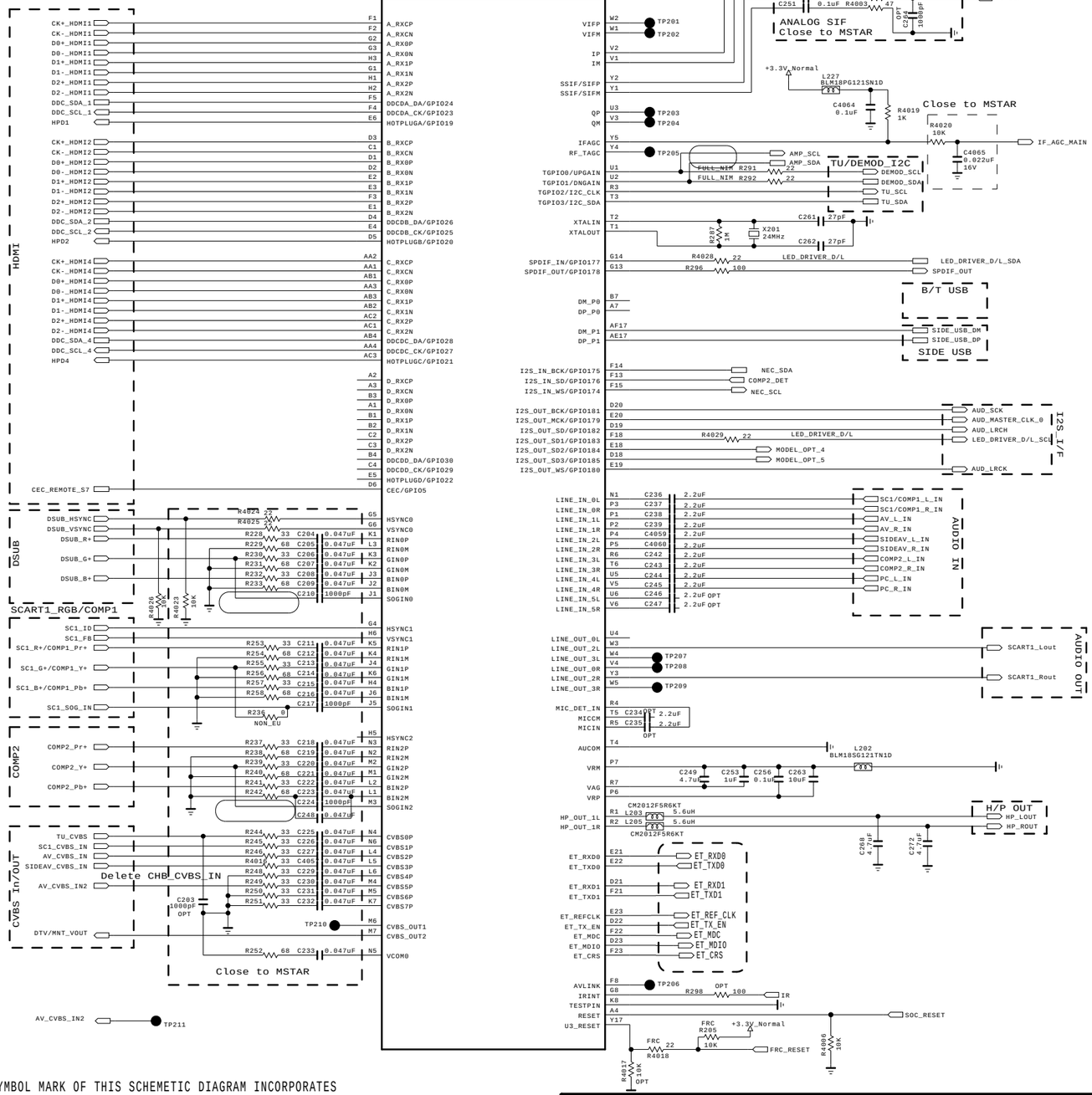

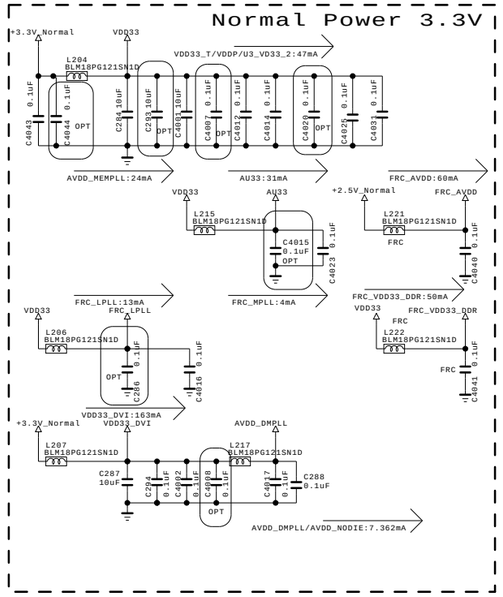

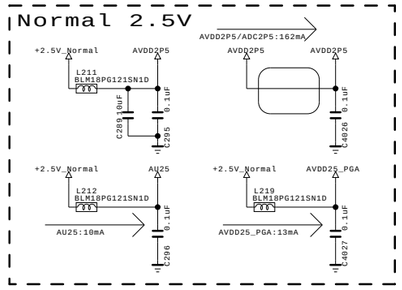

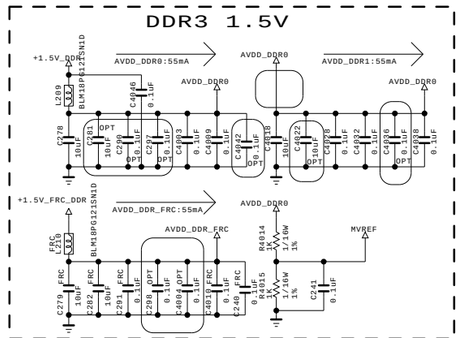

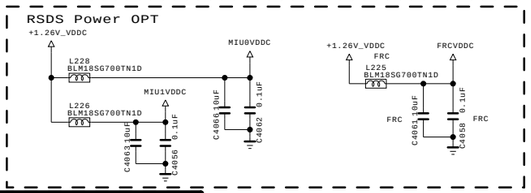

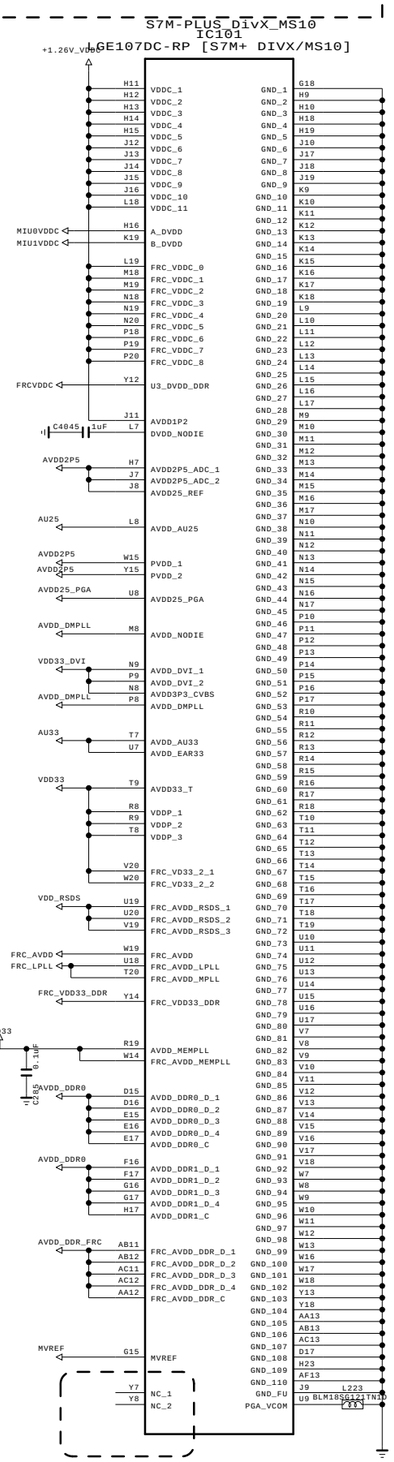

THE ⚠ SYMBOL MARK OF THIS SCHEMETIC DIAGRAM INCORPORATES SPECIAL FEATURES IMPORTANT FOR PROTECTION FROM X-RADIATION. FILRE AND ELECTRICAL SHOCK HAZARDS, WHEN SERVICING IF IS ESSENTIAL THAT ONLY MANUFATURES SPECFIED PARTS BE USED FOR THE CRITICAL COMPONENTS IN THE ⚠ SYMBOL MARK OF THE SCHEMETIC.

SECRET
LGElectronics

LG ELECTRONICS

MODEL	GP2R	DATE	20101023
BLOCK	MAIN2, HW OPT	SHEET	2 /

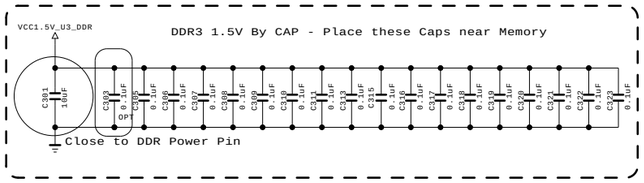

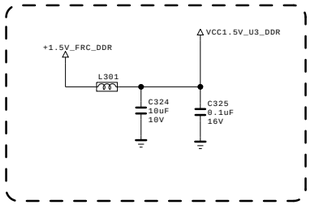

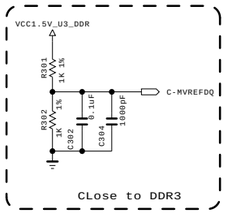

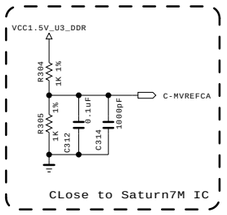

EAN61828901

IC301
H5TQ1G63DFR-H9C

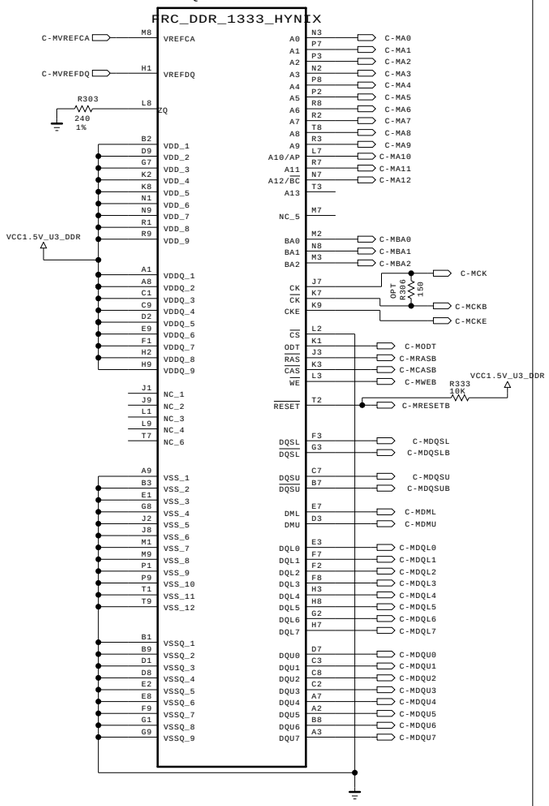

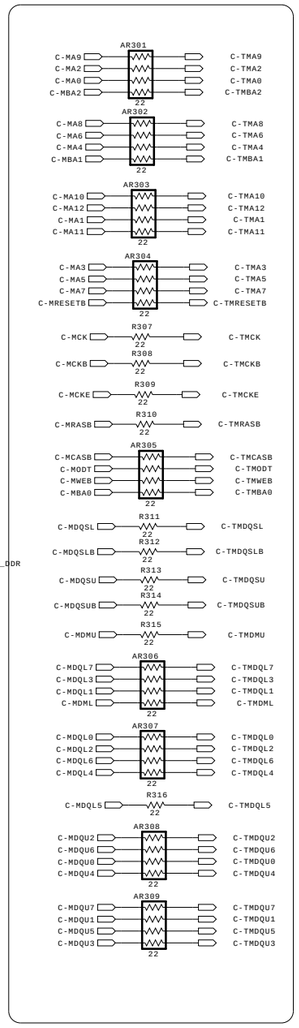

S7M-PLUS_DivX_MS10

IC101
LGE107DC-RP [S7M+ DIVX/MS10]

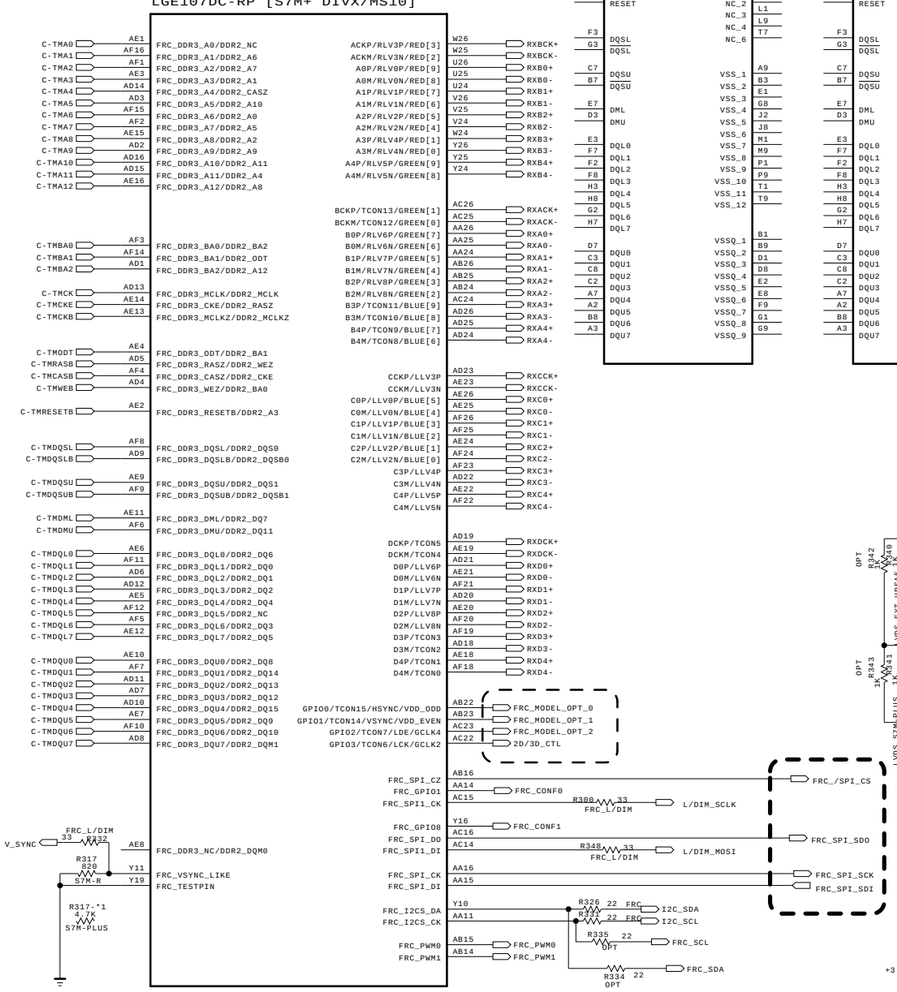

EAN61829001

IC301-*2
H5TQ1G63DFR-PBC

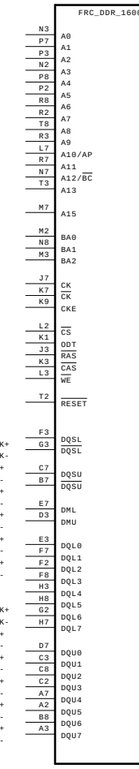

EAN60899001

IC301-*1
K4B1G1646E-HCH9000

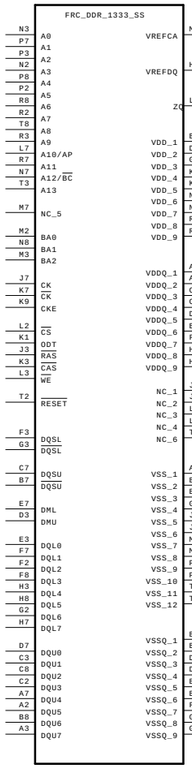

EAN61857101

IC301-*3
K4B1G1646G-BCH9

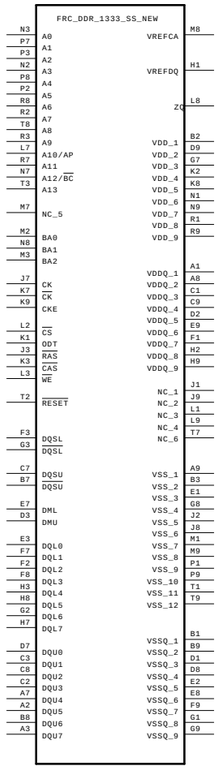

EAN61857201

IC301-*4
NT5CB64M16DP-CF

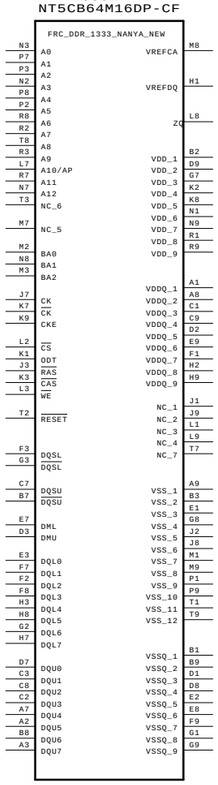

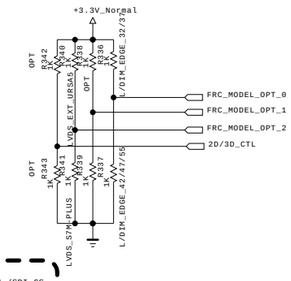

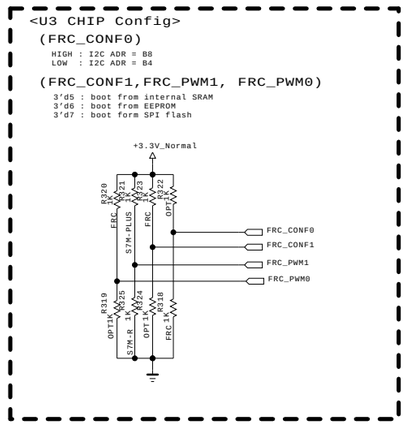

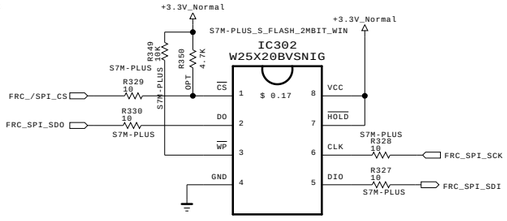

THE ⚠ SYMBOL MARK OF THIS SCHEMETIC DIAGRAM INCORPORATES SPECIAL FEATURES IMPORTANT FOR PROTECTION FROM X-RADIATION. FILRE AND ELECTRICAL SHOCK HAZARDS, WHEN SERVICING IF IS ESSENTIAL THAT ONLY MANUFATURES SPECFIED PARTS BE USED FOR THE CRITICAL COMPONENTS IN THE ⚠ SYMBOL MARK OF THE SCHEMETIC.

SECRET

LGElectronics

LG ELECTRONICS

MODEL	GP2R	DATE	20101023
BLOCK	FRC_DDR	SHEET	3

FROM LIPS & POWER B/D

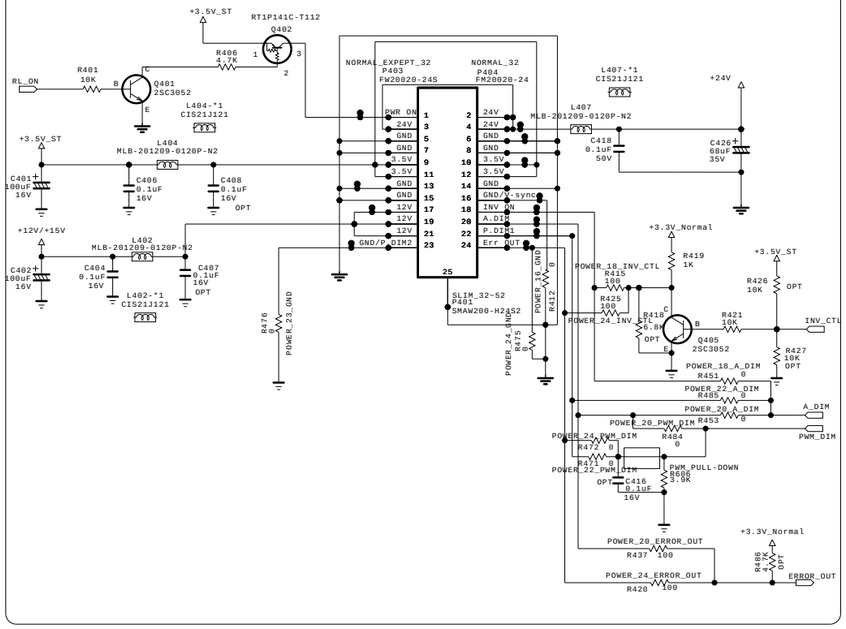

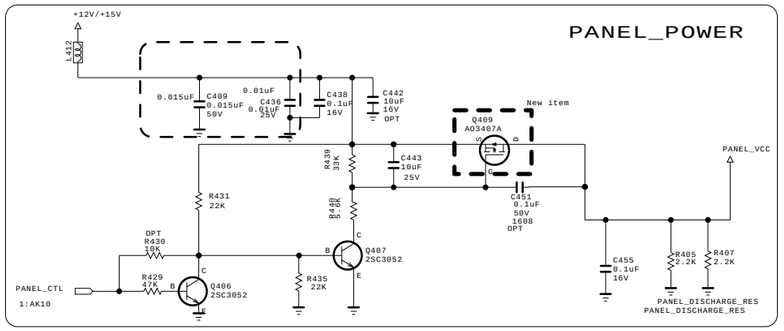

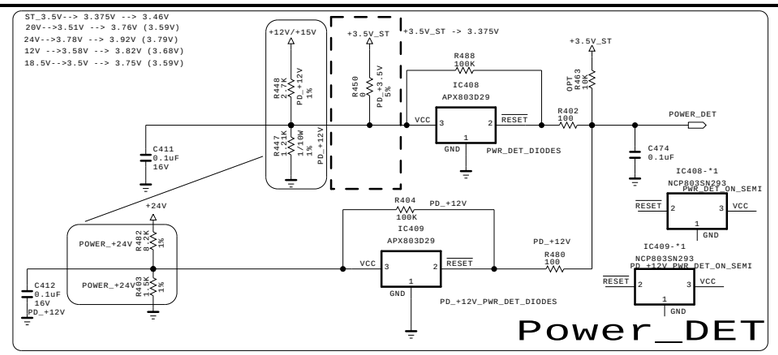

S7M DDR 1.5V

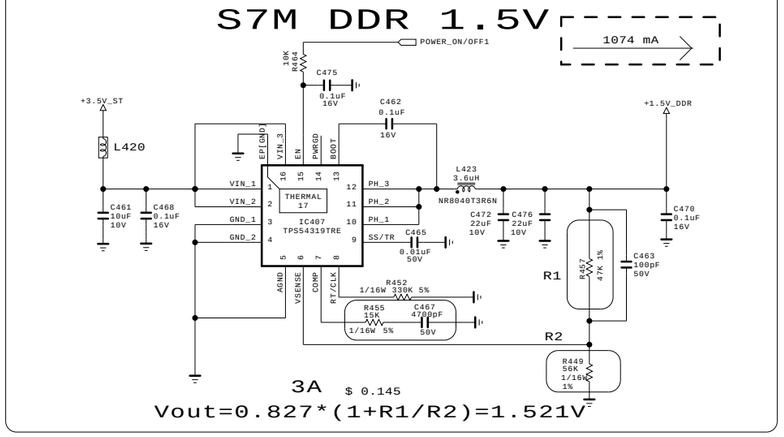

+3.3V_Normal

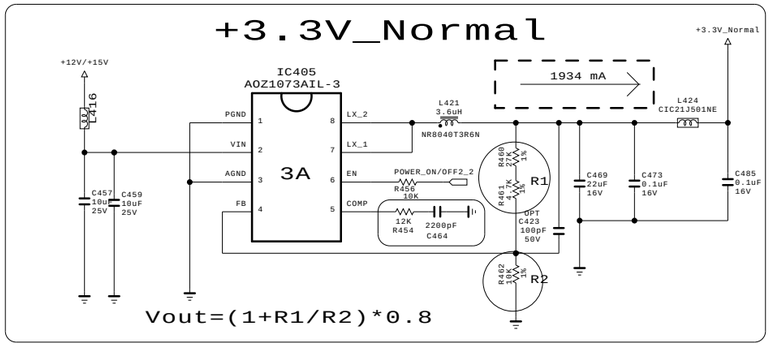

+2.5V/+1.8V

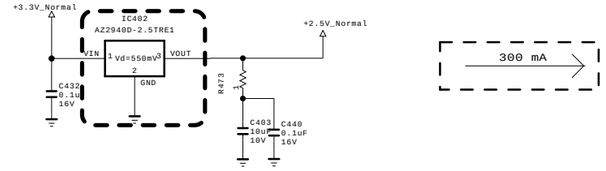

+5V_Normal

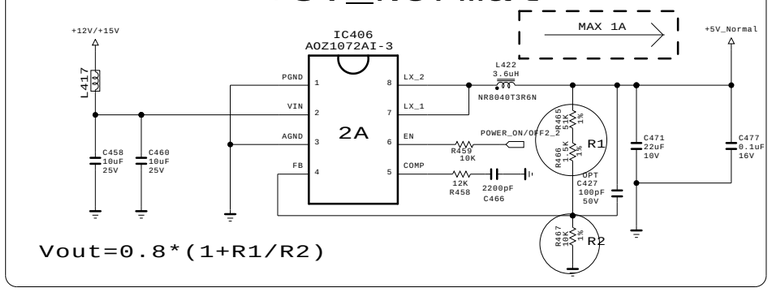

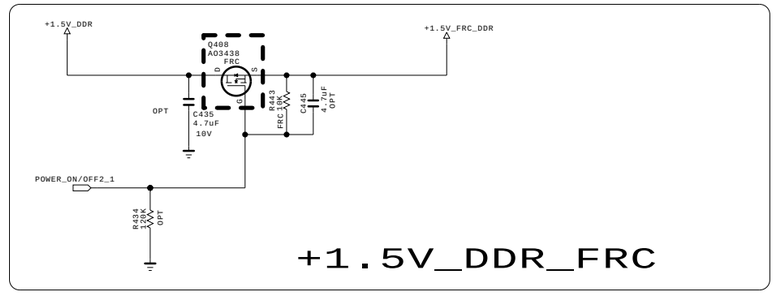

<MODULE PIN MAP>

PIN No	LGD(PSU) or LIPS	CMO10"Lamp (PSU)	AUO 10"Lamp (PSU)	SHARP (PSU)	IPS-@ (PSU)
16	GND	GND	GND	GND	GND
18	INV_ON	A-DIM	INV_ON	INV_ON	INV_ON
20	VBR-A	NC	Err_out	52/60:ERROR 26/32HD:NC	Err_out
22	PWM_DIM	PWM_DIM	NC	26/32/52:PWM 60:NC	NC
24	Err_out	INV_ON	PWM_DIM	26/32/52:GND 60:PWM	PWM_DIM
23	GND	GND	GND	GND	GND

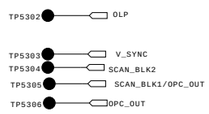

<LED MODULE PIN MAP -> latest update 20100618>

PIN No	LGD LPB/ OS LPB	32LE5300-TA CMO10"LED (PSU)	32LE4500-TA AUO 10"LED (PSU)	32LE5300-TA LGD 10"LED (PSU)	
16	NC	NC	NC	NC	
18	INV_ON	INV_ON	INV_ON	INV_ON	
20	NC	err_out --> NC	err_out --> NC	NC	
22	PWM_DIM	NC	NC	PWM_DIM	
24	err_out --> NC	PWM_DIM	PWM_DIM	err_out --> NC	
23	NC	NC	NC	NC	

LGD edge led error-out use or not? checking is necessary...

<Module Inv to Main Pin Connection>

INV <--> MAIN
#11 <--> #24
#12 <--> #18
#13 <--> #20
#14 <--> #22

+5V_USB

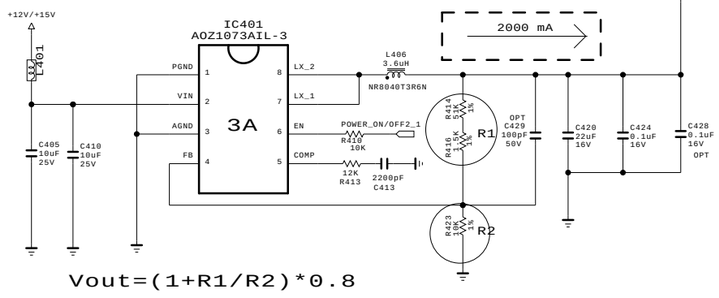

S7M core 1.26V volt

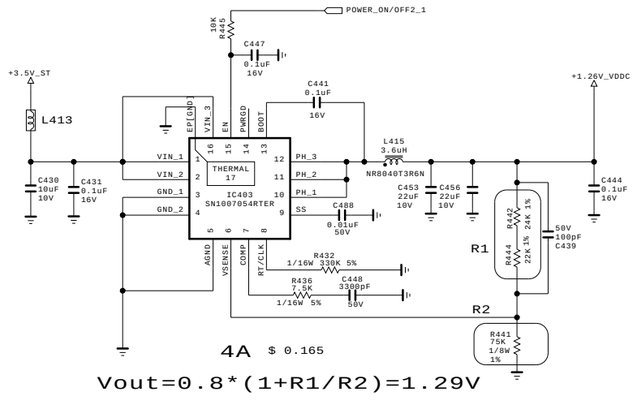

THE ⚠ SYMBOL MARK OF THIS SCHEMETIC DIAGRAM INCORPORATES SPECIAL FEATURES IMPORTANT FOR PROTECTION FROM X-RADIATION. FILRE AND ELECTRICAL SHOCK HAZARDS, WHEN SERVICING IF IS ESSENTIAL THAT ONLY MANUFATURES SPECFIED PARTS BE USED FOR THE CRITICAL COMPONENTS IN THE ⚠ SYMBOL MARK OF THE SCHEMETIC.

SECRET
LGElectronics

LG ELECTRONICS

MODEL	GP2R	DATE	20101023
BLOCK	POWER_LARGE	SHEET	4 /

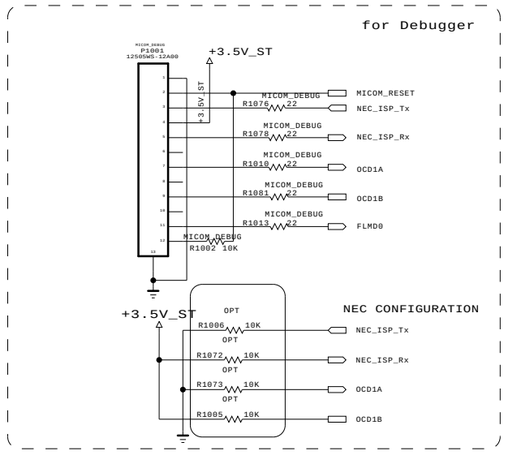

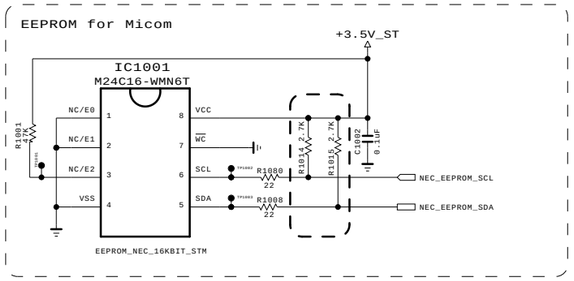

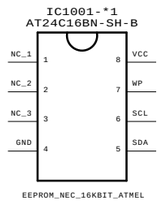

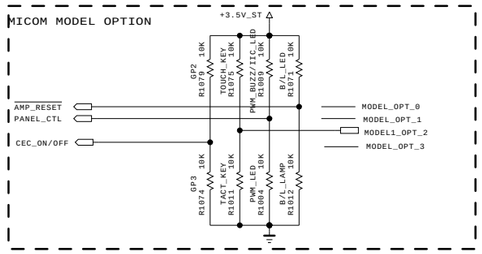

MODEL OPTION

PIN NAME	PIN NO.	HIGH	LOW
MODEL_OPT_0	8	B/L_LED	B/L_LAMP
MODEL_OPT_1	11	PWM_BUZZ/IIC_LED	PWM_LED
MODEL_OPT_2	30	TOUCH_KEY	TACT_KEY
MODEL_OPT_3	31	GP2	GP3

MODEL_OPT_0	MODEL_OPT_1	MODEL_OPT_2	MODEL_OPT_3	
LOW	LOW	LOW	LOW	LD350/450/550
HIGH	LOW	HIGH	LOW	19/22/26LE3300(5500)
HIGH	HIGH	HIGH	LOW	32/37/42/47/55LE5300(10)
LOW	HIGH	LOW	LOW	LD420
HIGH	HIGH	LOW	LOW	LE7300
	HIGH		HIGH	TBD

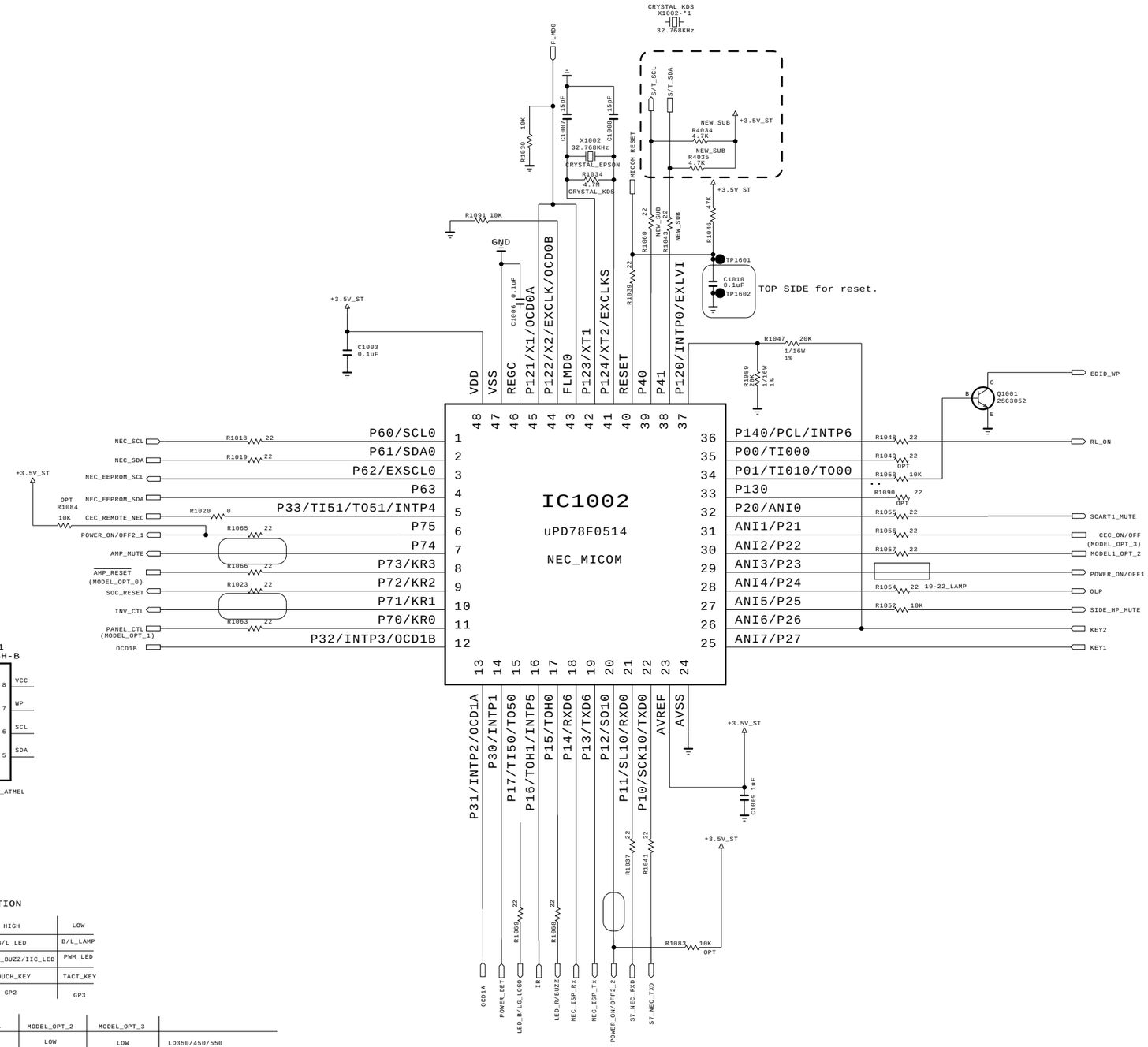

THE ⚠ SYMBOL MARK OF THIS SCHEMETIC DIAGRAM INCORPORATES SPECIAL FEATURES IMPORTANT FOR PROTECTION FROM X-RADIATION. FILRE AND ELECTRICAL SHOCK HAZARDS, WHEN SERVICING IF IS ESSENTIAL THAT ONLY MANUFATURES SPECFIED PARTS BE USED FOR THE CRITICAL COMPONENTS IN THE ⚠ SYMBOL MARK OF THE SCHEMETIC.

SECRET

LGElectronics

LG ELECTRONICS

MODEL	GP2R	DATE	20101023
BLOCK	MICOM	SHEET	5

CONTROL
IR & LED

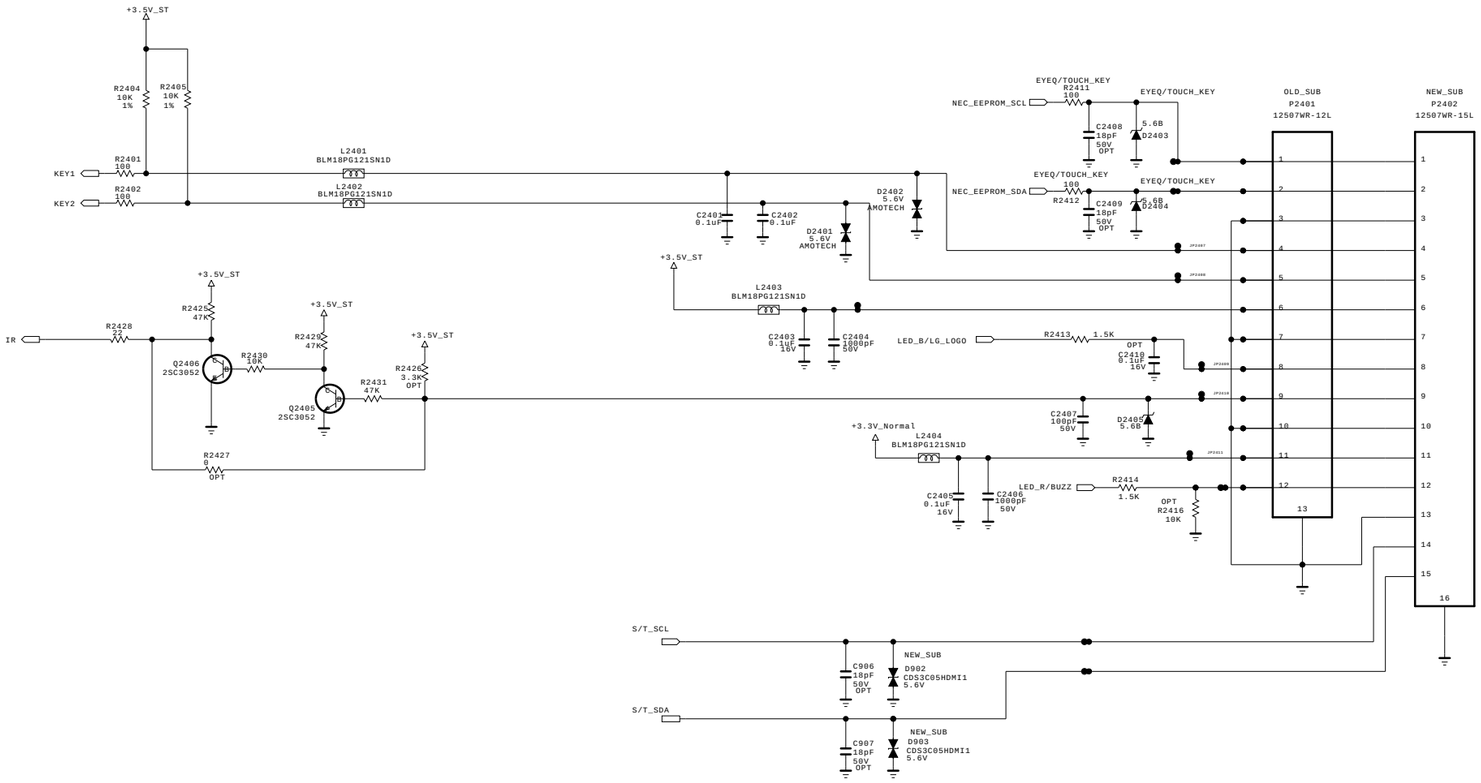

THE ⚠ SYMBOL MARK OF THIS SCHEMETIC DIAGRAM INCORPORATES SPECIAL FEATURES IMPORTANT FOR PROTECTION FROM X-RADIATION. FILRE AND ELECTRICAL SHOCK HAZARDS, WHEN SERVICING IF IS ESSENTIAL THAT ONLY MANUFATURES SPECFIED PARTS BE USED FOR THE CRITICAL COMPONENTS IN THE ⚠ SYMBOL MARK OF THE SCHEMETIC.

SECRET
LGElectronics

LG ELECTRONICS

MODEL	GP2R	DATE	20101023
BLOCK	IR/CONTROL-L	SHEET	6

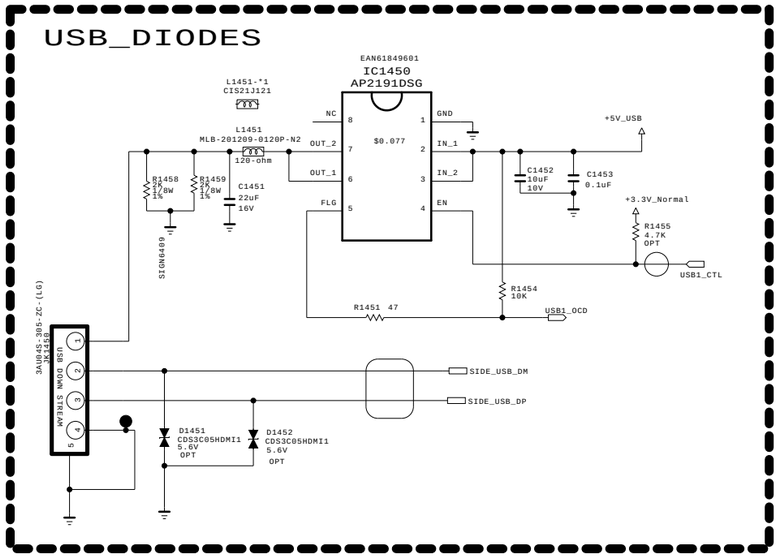

THE ⚠ SYMBOL MARK OF THIS SCHEMETIC DIAGRAM INCORPORATES SPECIAL FEATURES IMPORTANT FOR PROTECTION FROM X-RADIATION. FILRE AND ELECTRICAL SHOCK HAZARDS, WHEN SERVICING IF IS ESSENTIAL THAT ONLY MANUFATURES SPECFIED PARTS BE USED FOR THE CRITICAL COMPONENTS IN THE ⚠ SYMBOL MARK OF THE SCHEMETIC.

SECRET

LGElectronics

LG ELECTRONICS

MODEL	GP2R	DATE	20101023
BLOCK	USB_OCP_DIODE	SHEET	7 /

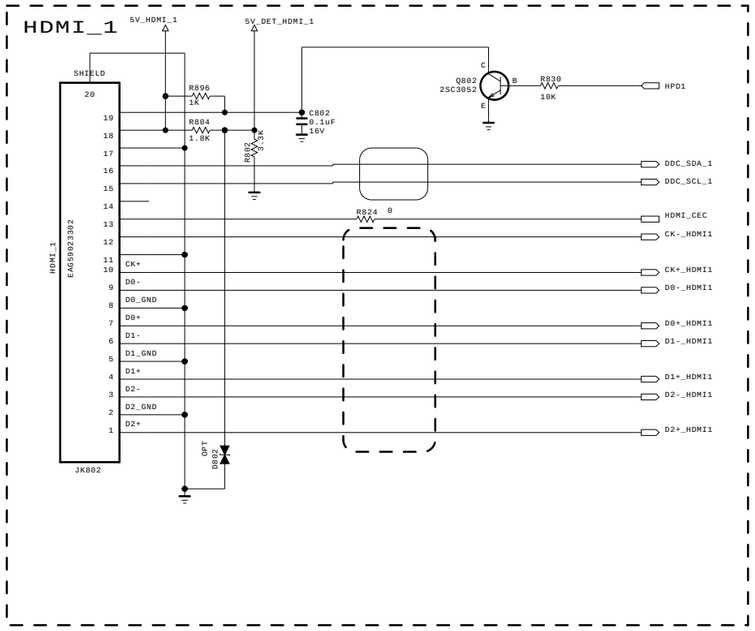

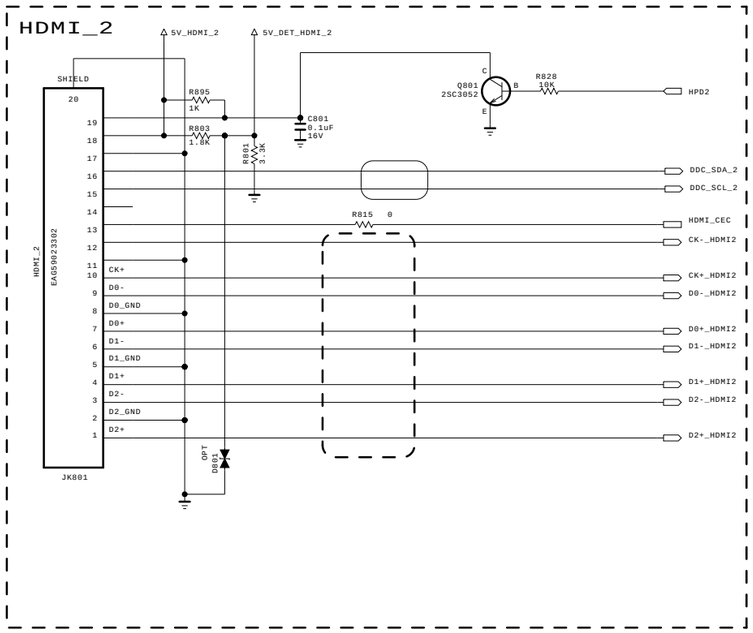

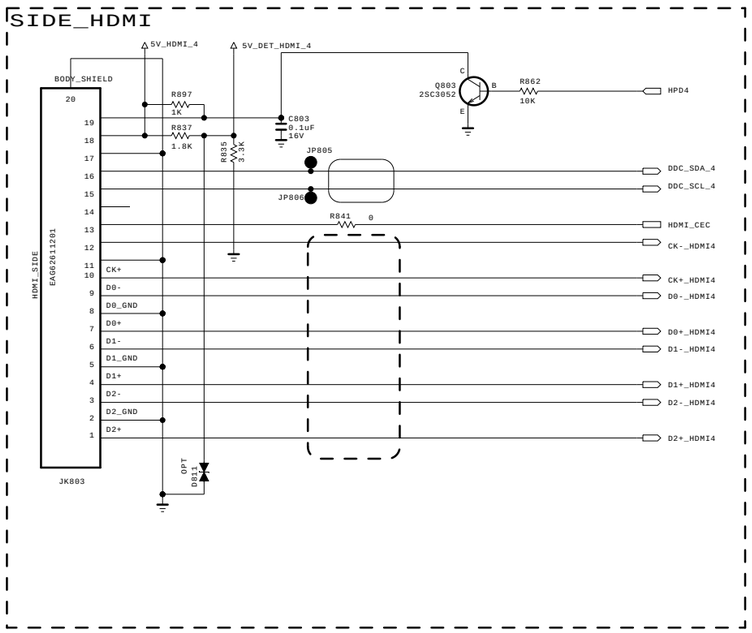

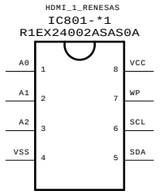

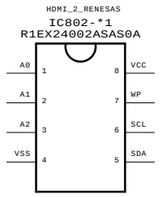

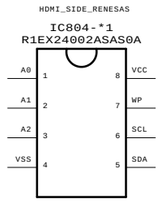

HDMI EEPROM

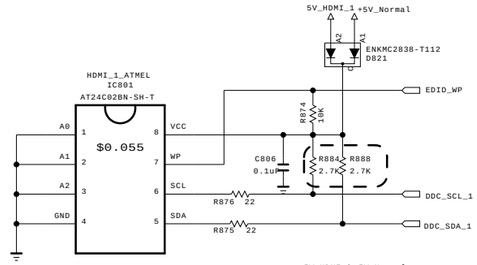

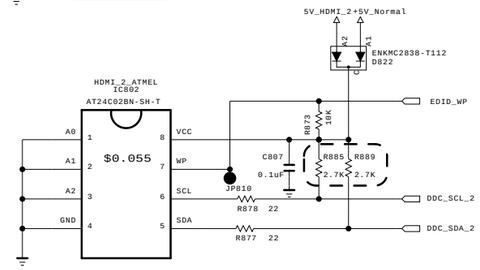

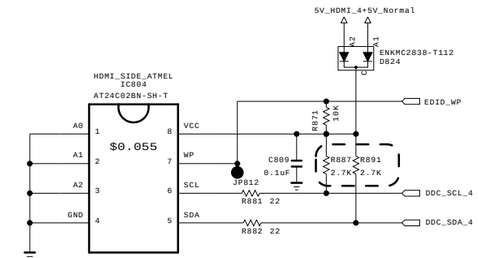

For CEC

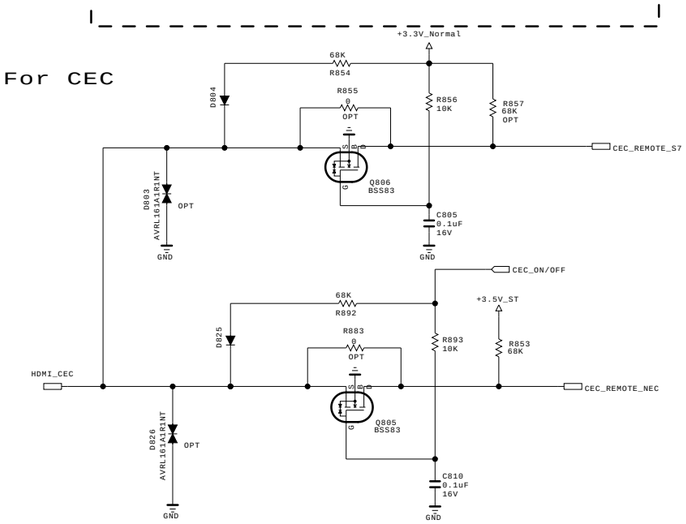

THE ⚠ SYMBOL MARK OF THIS SCHEMETIC DIAGRAM INCORPORATES SPECIAL FEATURES IMPORTANT FOR PROTECTION FROM X-RADIATION. FILRE AND ELECTRICAL SHOCK HAZARDS, WHEN SERVICING IF IS ESSENTIAL THAT ONLY MANUFATURES SPECFIED PARTS BE USED FOR THE CRITICAL COMPONENTS IN THE ⚠ SYMBOL MARK OF THE SCHEMETIC.

SECRET
LGElectronics

LG ELECTRONICS

MODEL	GP2R	DATE	20101023
BLOCK	HDMI	SHEET	8

RGB/SPDIF/PC/HP

New Item Development

EARPHONE BLOCK

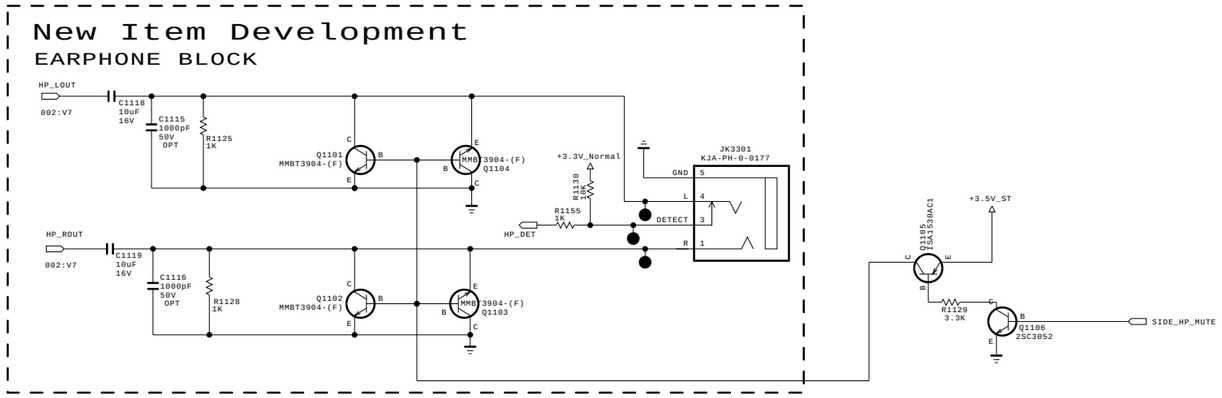

PC AUDIO

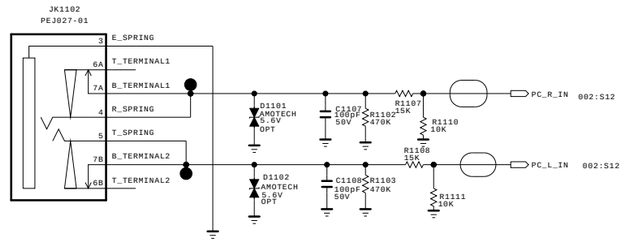

SPDIF OPTIC JACK

5.15 Mstar Circuit Application

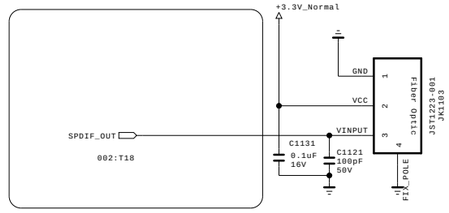

RGB PC

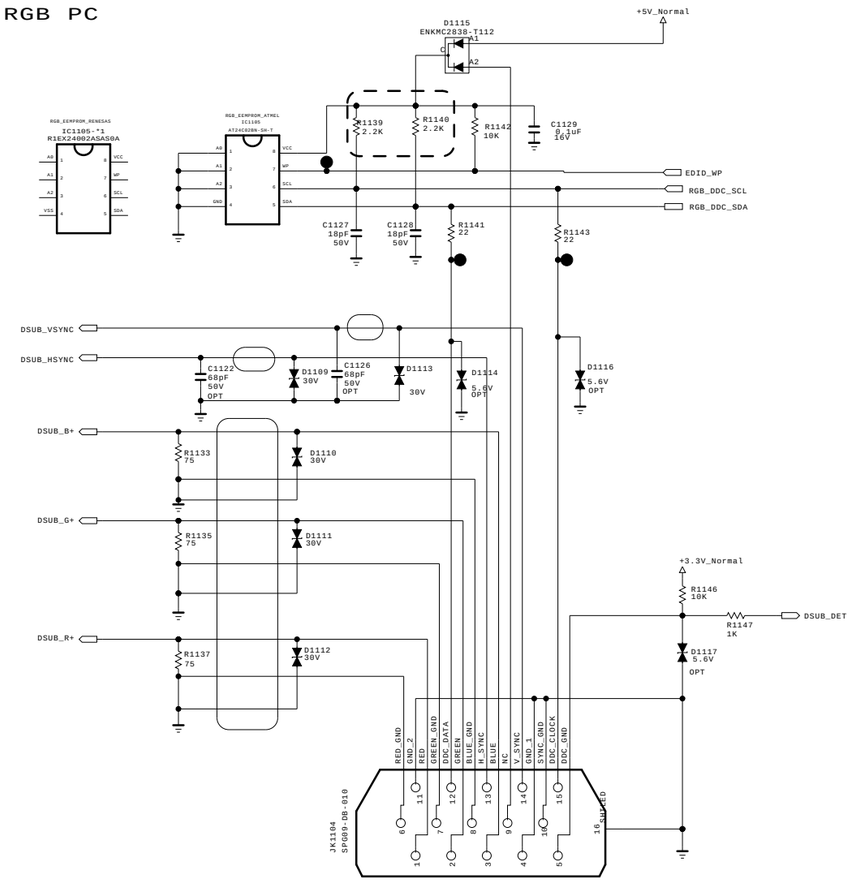

THE ⚠ SYMBOL MARK OF THIS SCHEMETIC DIAGRAM INCORPORATES SPECIAL FEATURES IMPORTANT FOR PROTECTION FROM X-RADIATION. FILRE AND ELECTRICAL SHOCK HAZARDS, WHEN SERVICING IF IS ESSENTIAL THAT ONLY MANUFATURES SPECFIED PARTS BE USED FOR THE CRITICAL COMPONENTS IN THE ⚠ SYMBOL MARK OF THE SCHEMETIC.

SECRET

LGElectronics

LG ELECTRONICS

MODEL	GP2R	DATE	20101023
BLOCK	RGB/SPDIF/HP	SHEET	9 /

RS232C

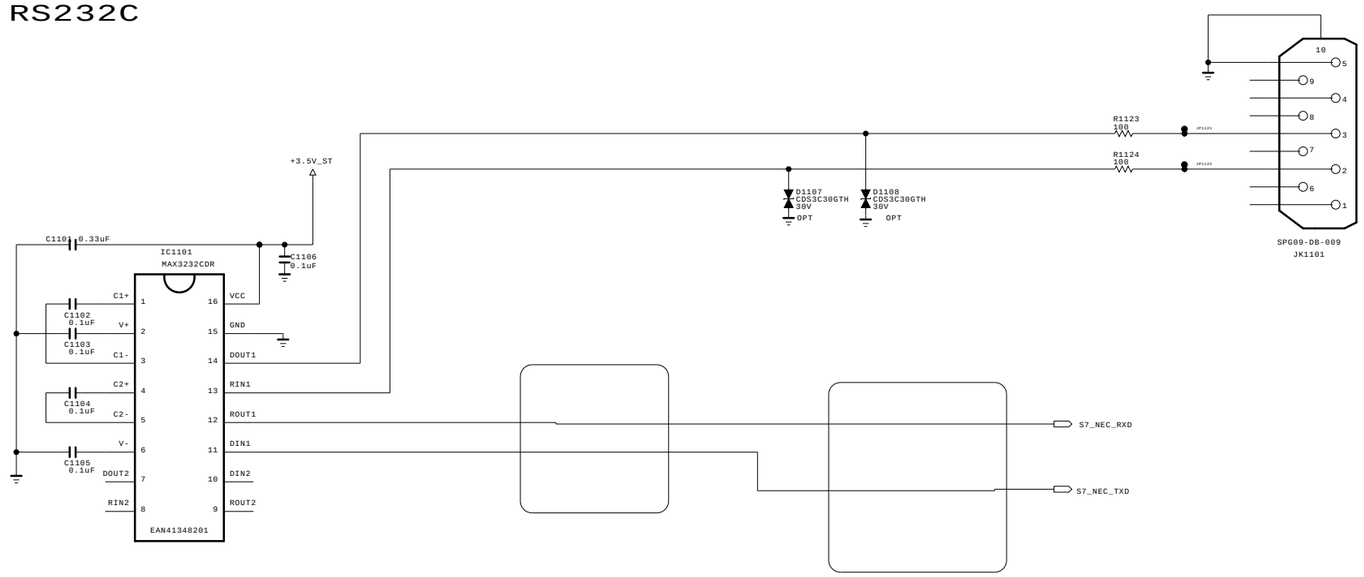

THE ⚠ SYMBOL MARK OF THIS SCHEMETIC DIAGRAM INCORPORATES SPECIAL FEATURES IMPORTANT FOR PROTECTION FROM X-RADIATION. FILRE AND ELECTRICAL SHOCK HAZARDS, WHEN SERVICING IF IS ESSENTIAL THAT ONLY MANUFATURES SPECFIED PARTS BE USED FOR THE CRITICAL COMPONENTS IN THE ⚠ SYMBOL MARK OF THE SCHEMETIC.

SECRET
LG Electronics

LG ELECTRONICS

MODEL	GP2R	DATE	20101023
BLOCK	RS232C_9PIN	SHEET	10 /

[51Pin LVDS Connector]
(For FHD 60/120Hz)

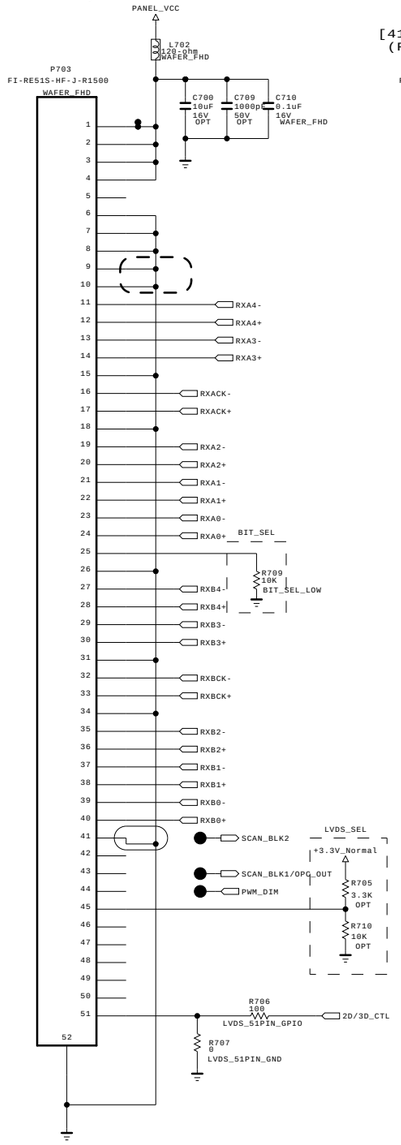

[41Pin LVDS Connector]
(For FHD 120Hz)

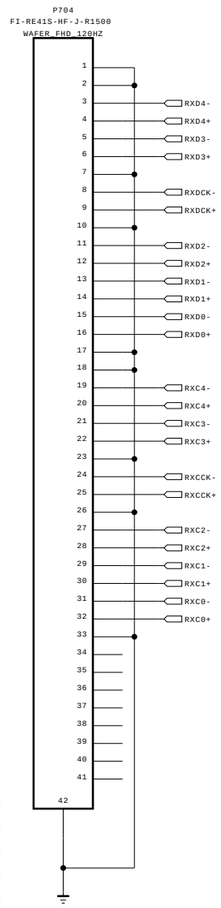

[30Pin LVDS Connector]
(For HD 60Hz_Normal)

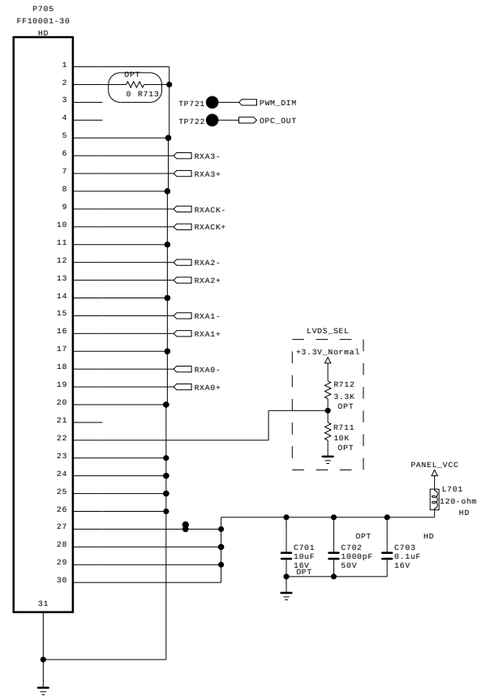

THE ⚠ SYMBOL MARK OF THIS SCHEMETIC DIAGRAM INCORPORATES SPECIAL FEATURES IMPORTANT FOR PROTECTION FROM X-RADIATION. FILRE AND ELECTRICAL SHOCK HAZARDS, WHEN SERVICING IF IS ESSENTIAL THAT ONLY MANUFATURES SPECFIED PARTS BE USED FOR THE CRITICAL COMPONENTS IN THE ⚠ SYMBOL MARK OF THE SCHEMETIC.

SECRET
LGElectronics

LG ELECTRONICS

MODEL	GP2R	DATE	20101023
BLOCK	LVDS_LARGE	SHEET	11

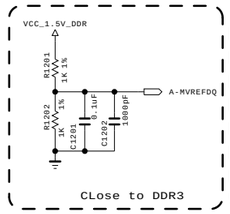

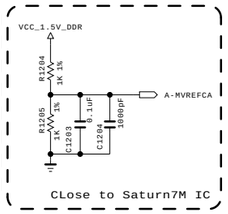

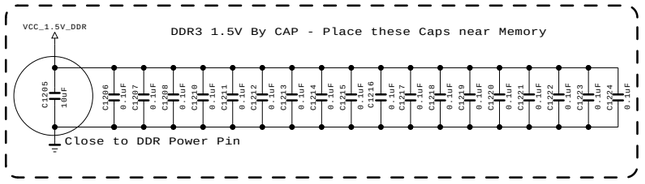

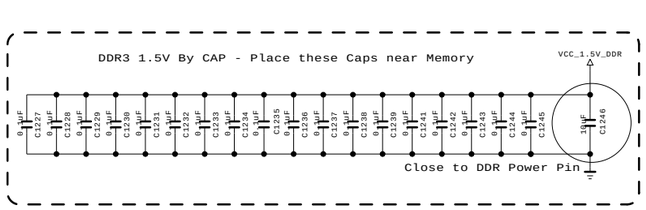

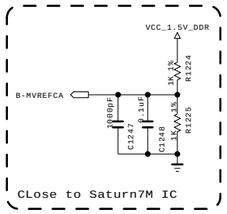

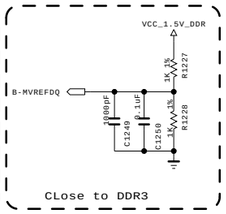

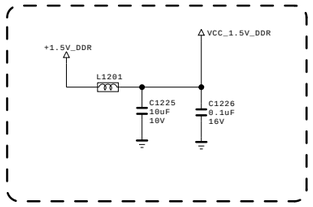

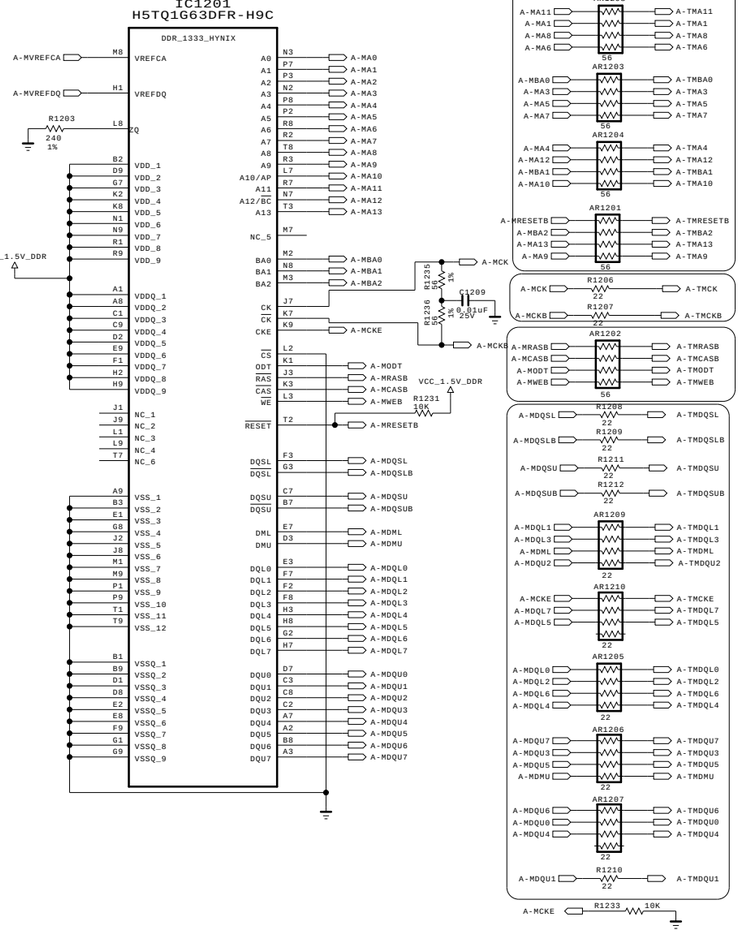

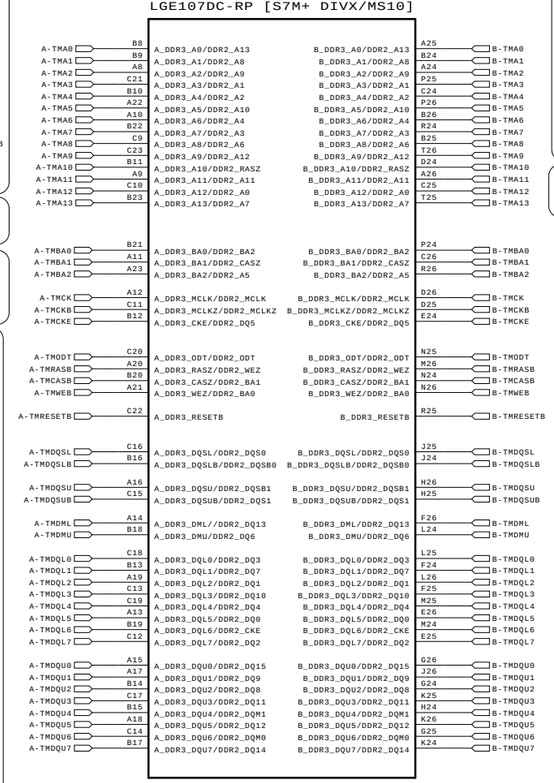

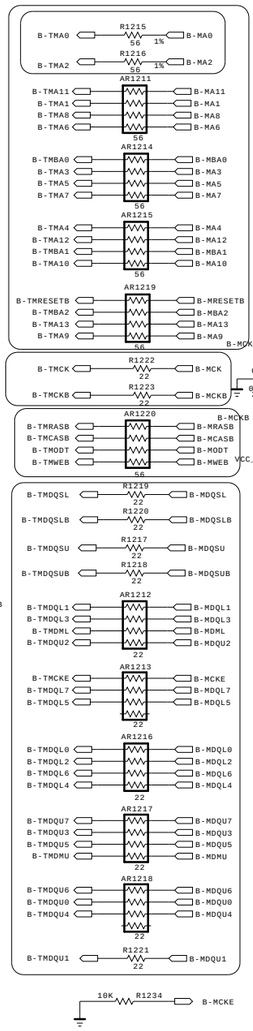

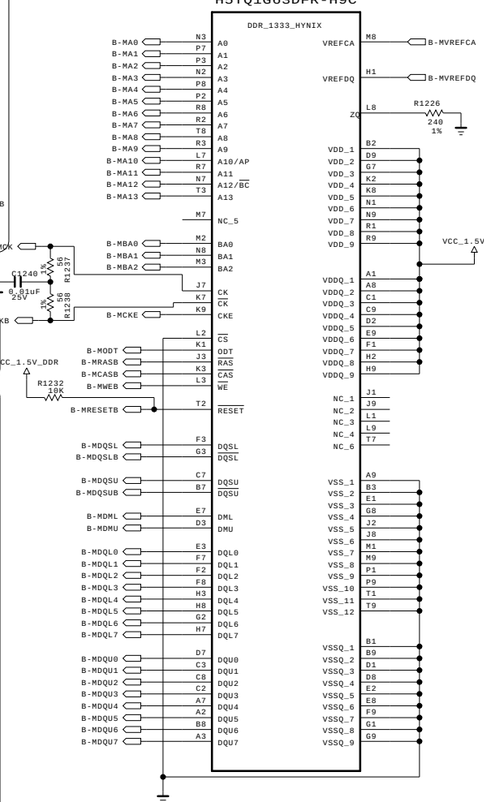

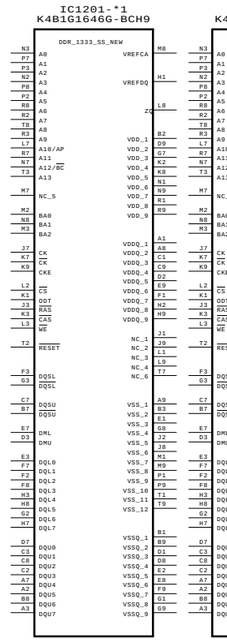

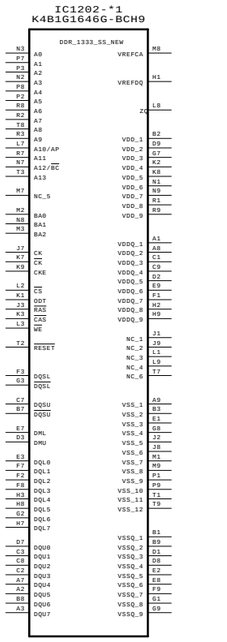

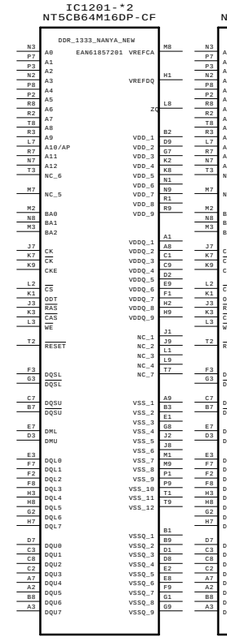

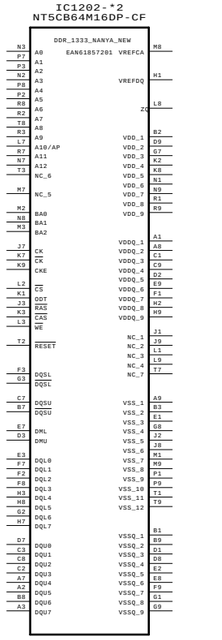

THE ⚠ SYMBOL MARK OF THIS SCHEMETIC DIAGRAM INCORPORATES SPECIAL FEATURES IMPORTANT FOR PROTECTION FROM X-RADIATION. FILRE AND ELECTRICAL SHOCK HAZARDS, WHEN SERVICING IF IS ESSENTIAL THAT ONLY MANUFATURES SPECFIED PARTS BE USED FOR THE CRITICAL COMPONENTS IN THE ⚠ SYMBOL MARK OF THE SCHEMETIC.

SECRET
LGElectronics

LG ELECTRONICS

MODEL	GP2R	DATE	20101023
BLOCK	DDR_256	SHEET	12 /

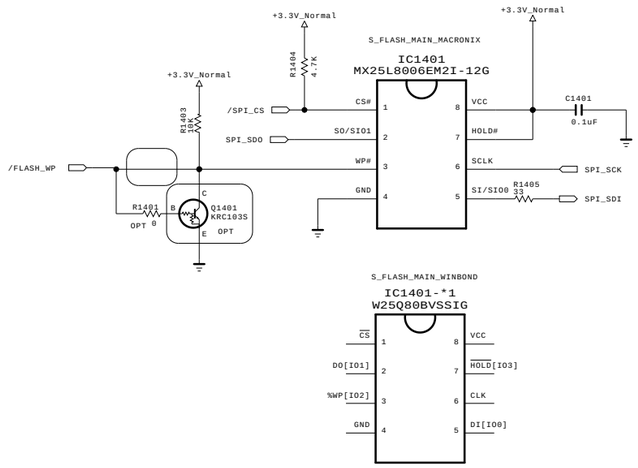

THE ⚠ SYMBOL MARK OF THIS SCHEMETIC DIAGRAM INCORPORATES SPECIAL FEATURES IMPORTANT FOR PROTECTION FROM X-RADIATION. FILRE AND ELECTRICAL SHOCK HAZARDS, WHEN SERVICING IF IS ESSENTIAL THAT ONLY MANUFATURES SPECFIED PARTS BE USED FOR THE CRITICAL COMPONENTS IN THE ⚠ SYMBOL MARK OF THE SCHEMETIC.

SECRET

LGElectronics

LG ELECTRONICS

MODEL	GP2R	DATE	20101023
BLOCK	SFLASH 1MB	SHEET	13 /

GP2R_LARGE_TUNER

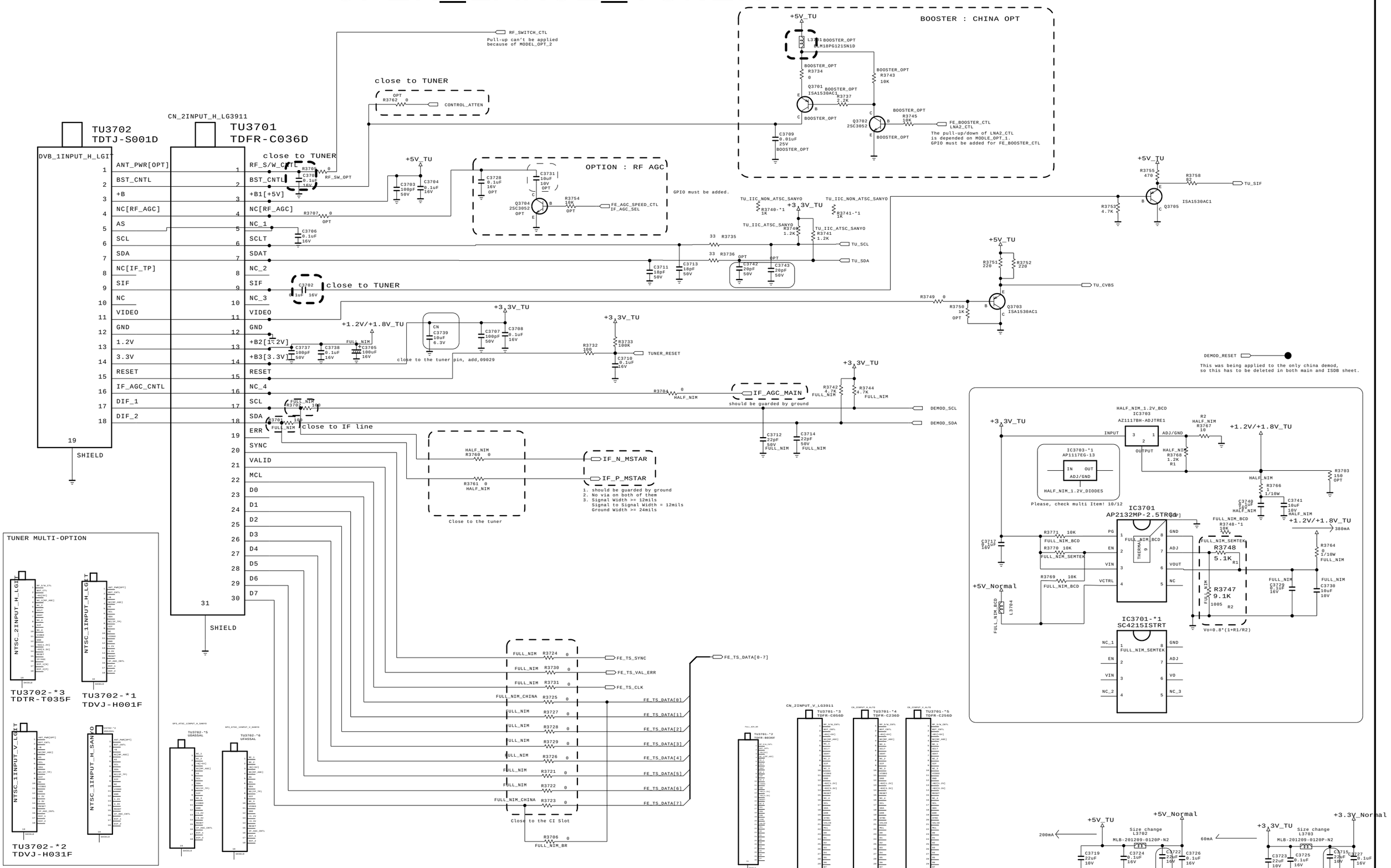

THE ⚠ SYMBOL MARK OF THIS SCHEMETIC DIAGRAM INCORPORATES SPECIAL FEATURES IMPORTANT FOR PROTECTION FROM X-RADIATION. FILRE AND ELECTRICAL SHOCK HAZARDS, WHEN SERVICING IF IS ESSENTIAL THAT ONLY MANUFATURES SPECFIED PARTS BE USED FOR THE CRITICAL COMPONENTS IN THE ⚠ SYMBOL MARK OF THE SCHEMETIC.

SECRET

LGElectronics

LG ELECTRONICS

MODEL	GP2R	DATE	20101023
BLOCK	TUNER_L	SHEET	14 /

WOOFER AMP

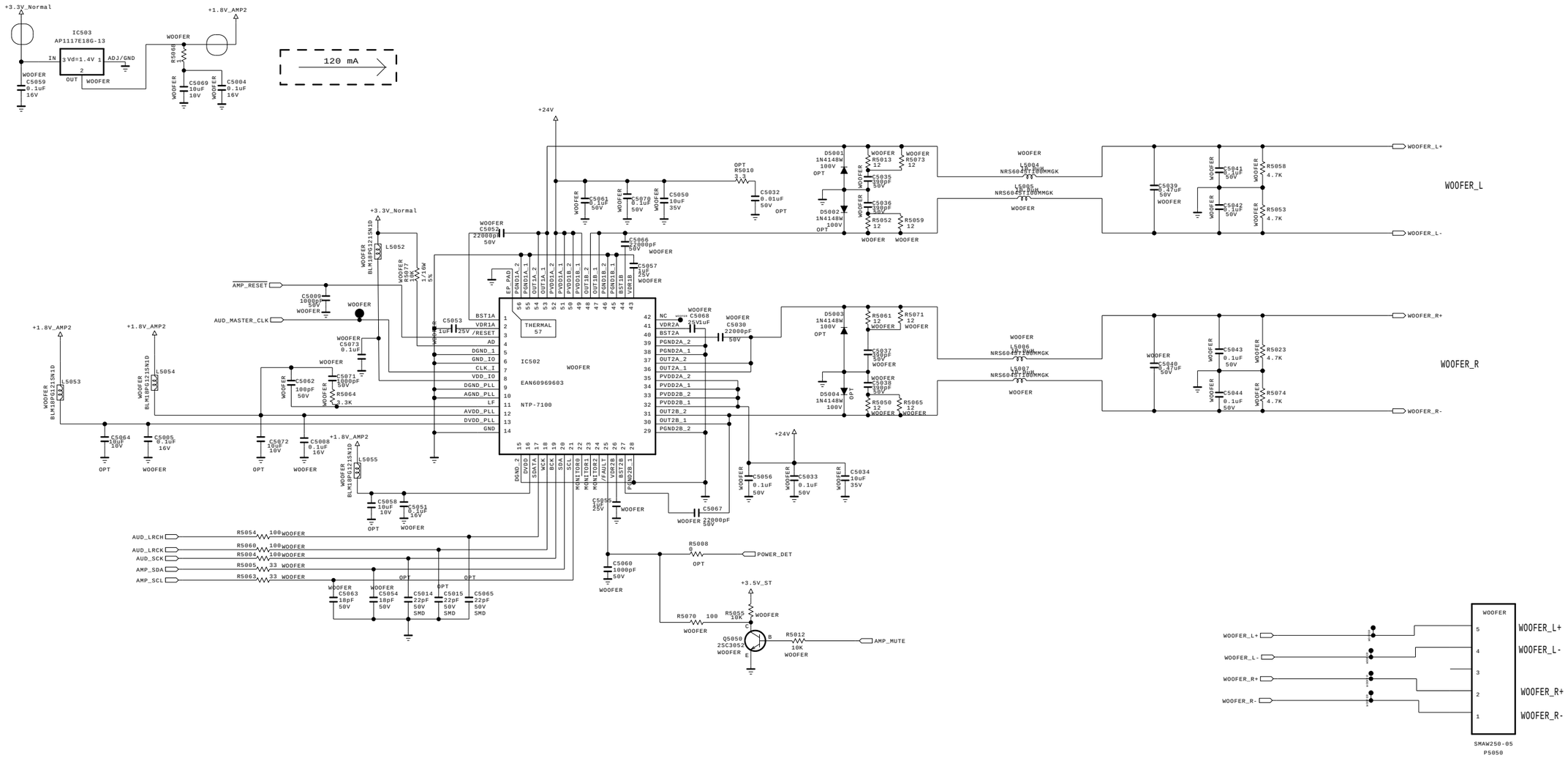

THE ⚠ SYMBOL MARK OF THIS SCHEMETIC DIAGRAM INCORPORATES SPECIAL FEATURES IMPORTANT FOR PROTECTION FROM X-RADIATION. FILRE AND ELECTRICAL SHOCK HAZARDS, WHEN SERVICING IF IS ESSENTIAL THAT ONLY MANUFATURES SPECFIED PARTS BE USED FOR THE CRITICAL COMPONENTS IN THE ⚠ SYMBOL MARK OF THE SCHEMETIC.

SECRET

LGElectronics

LG ELECTRONICS

MODEL	GP2R	DATE	20101023
BLOCK	WOOFER NTP	SHEET	15 /

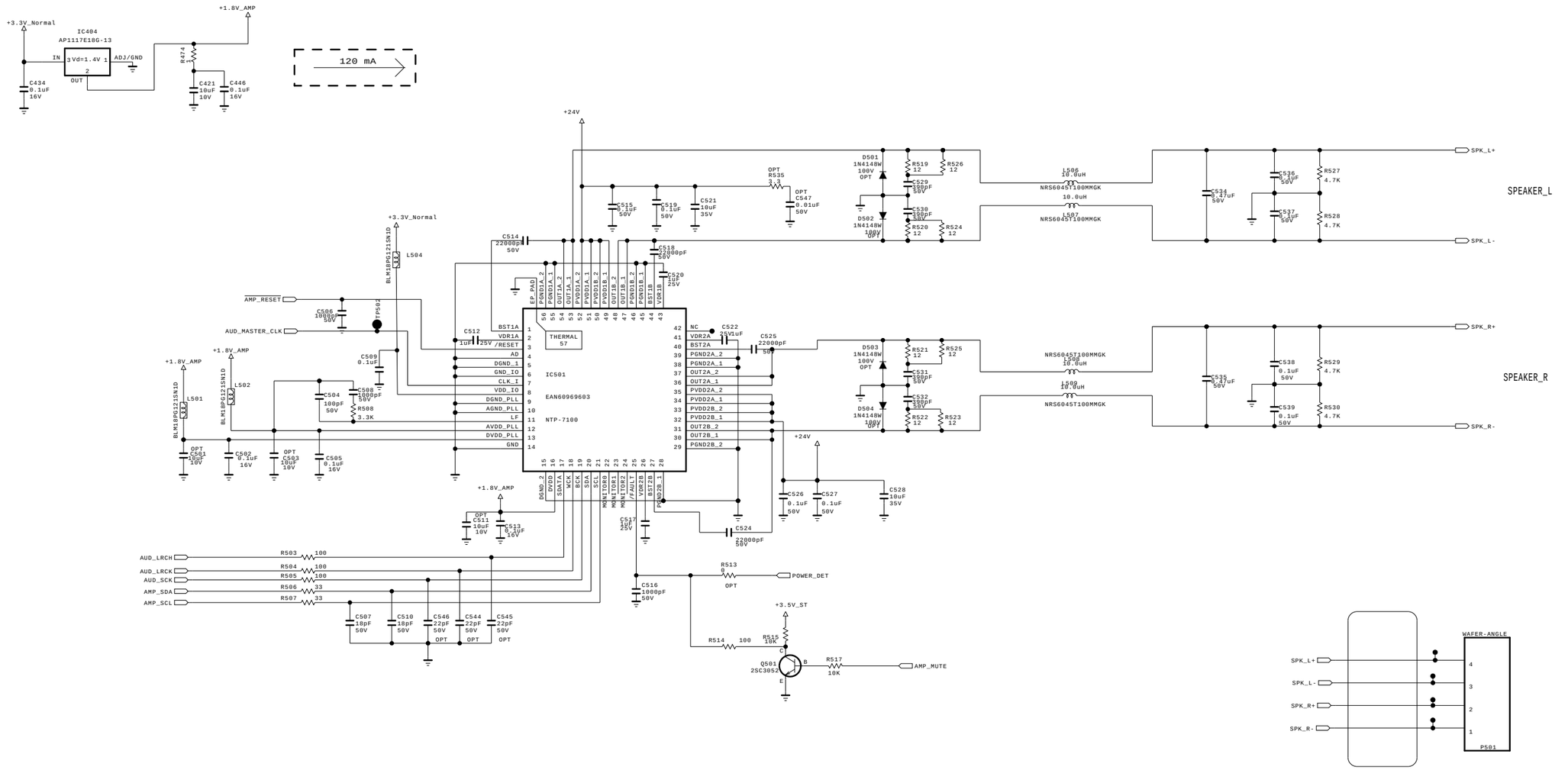

THE ⚠ SYMBOL MARK OF THIS SCHEMETIC DIAGRAM INCORPORATES SPECIAL FEATURES IMPORTANT FOR PROTECTION FROM X-RADIATION. FILRE AND ELECTRICAL SHOCK HAZARDS, WHEN SERVICING IF IS ESSENTIAL THAT ONLY MANUFATURES SPECFIED PARTS BE USED FOR THE CRITICAL COMPONENTS IN THE ⚠ SYMBOL MARK OF THE SCHEMETIC.

SECRET

LGElectronics

LG ELECTRONICS

MODEL	GP2R	DATE	20101023
BLOCK	AMP NTP	SHEET	16 /

Rear AV

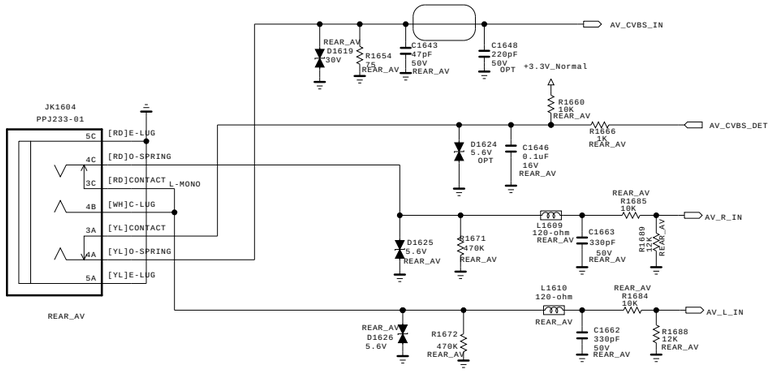

COMPONENT2

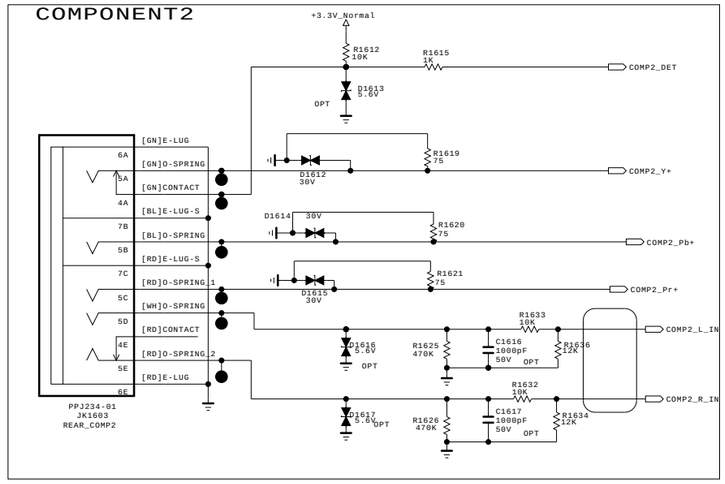

ETHERNET FOR DVB_T2

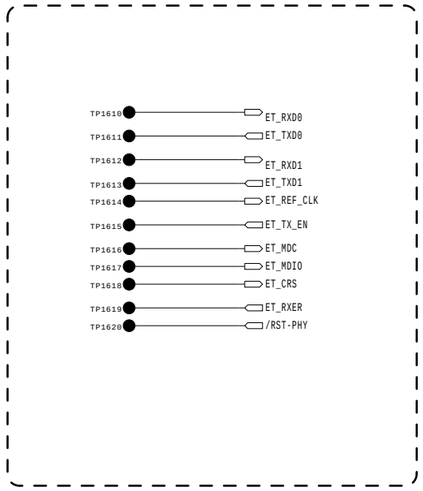

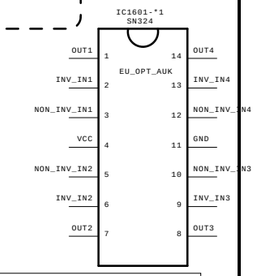

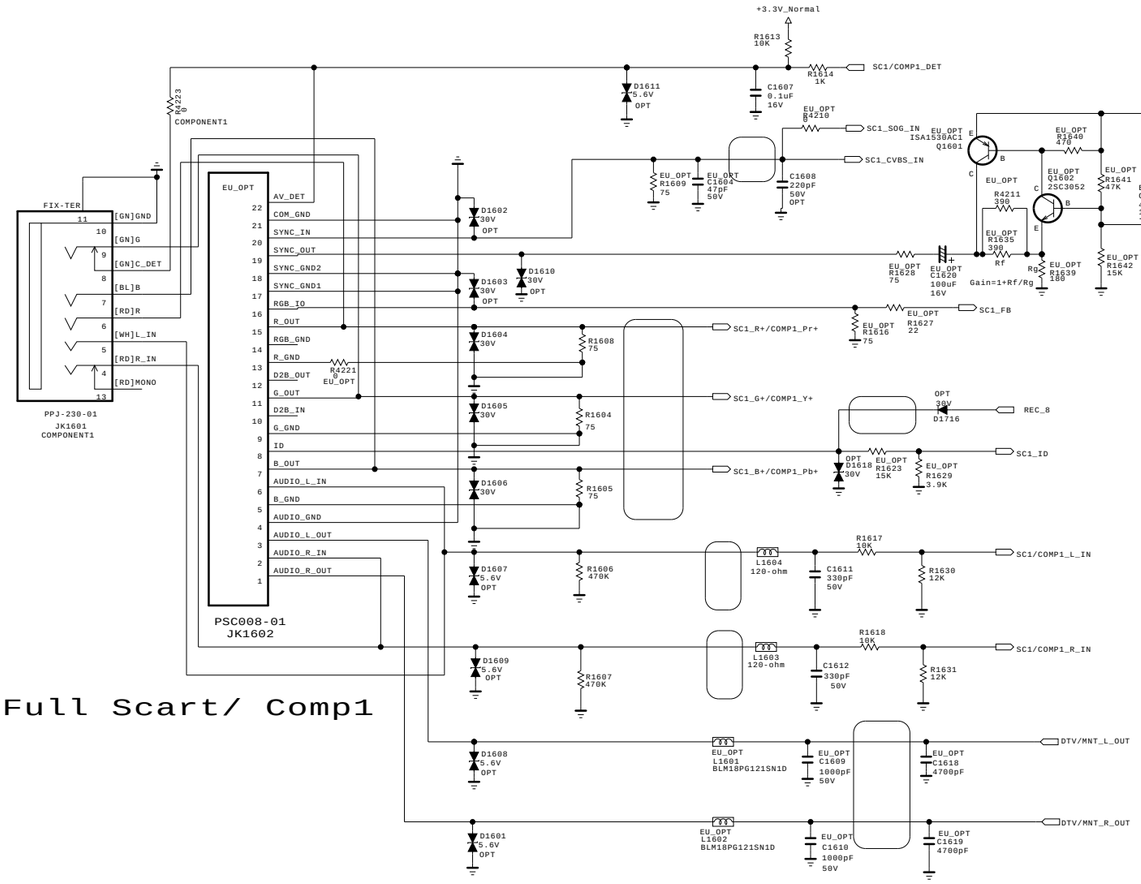

Full Scart/ Comp1

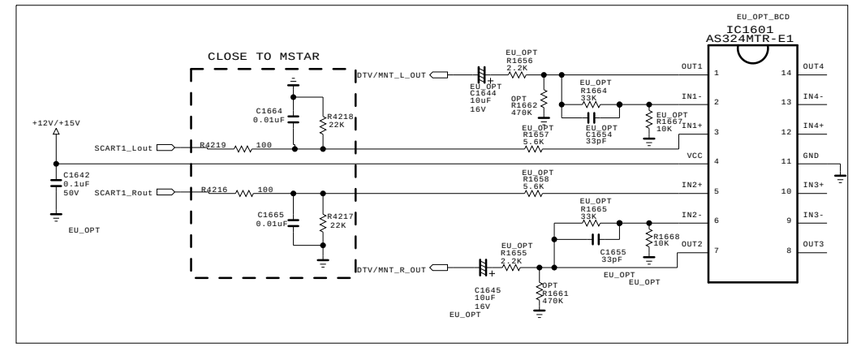

[SCART PIN 8]

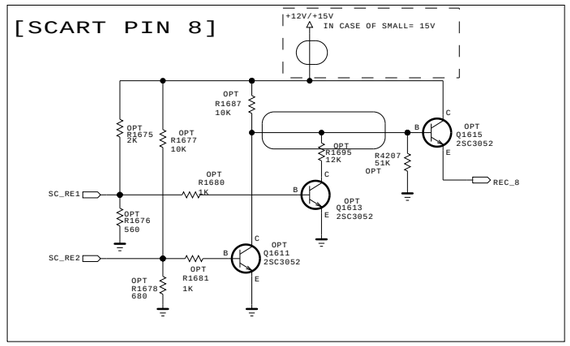

[SCART AUDIO MUTE]

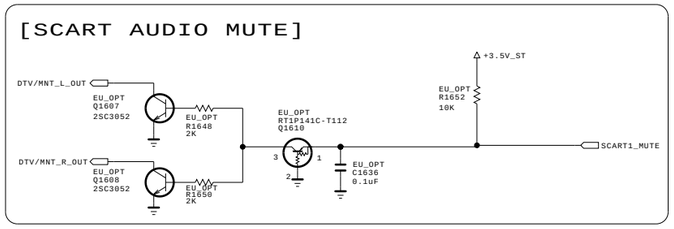

THE ⚠ SYMBOL MARK OF THIS SCHEMETIC DIAGRAM INCORPORATES SPECIAL FEATURES IMPORTANT FOR PROTECTION FROM X-RADIATION. FILRE AND ELECTRICAL SHOCK HAZARDS, WHEN SERVICING IF IS ESSENTIAL THAT ONLY MANUFATURES SPECFIED PARTS BE USED FOR THE CRITICAL COMPONENTS IN THE ⚠ SYMBOL MARK OF THE SCHEMETIC.

SECRET

LGElectronics

LG ELECTRONICS

MODEL	GP2R	DATE	20101023
BLOCK	REAR JACK	SHEET	17

SIDE CVBS PHONE JACK
(New Item Development)

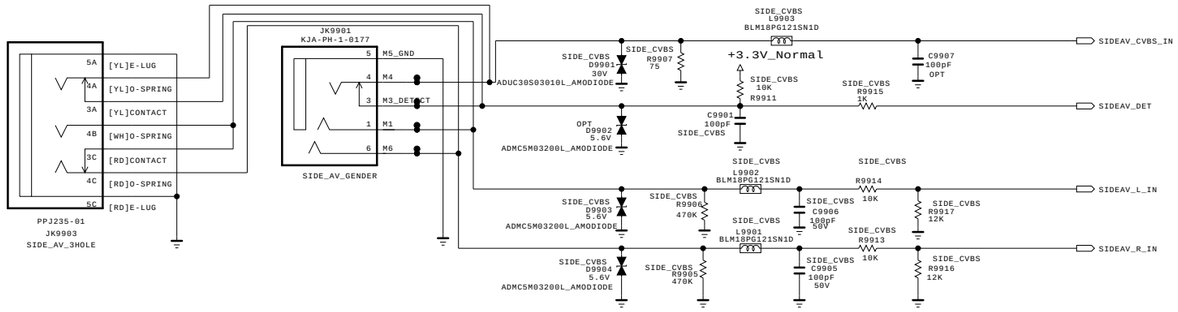

SIDE COMPONENT PHONE JACK
(New Item Developmen)

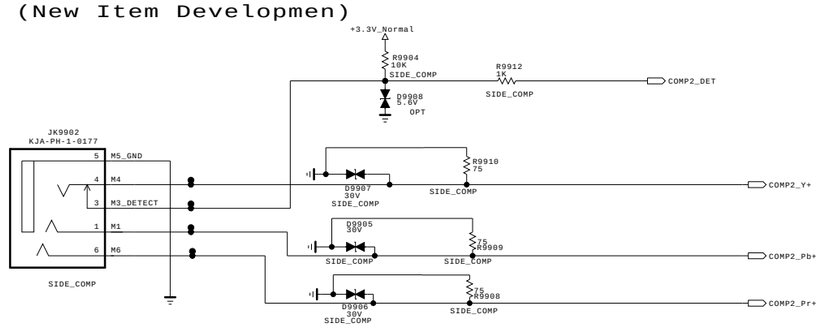

THE ⚠ SYMBOL MARK OF THIS SCHEMETIC DIAGRAM INCORPORATES SPECIAL FEATURES IMPORTANT FOR PROTECTION FROM X-RADIATION. FILRE AND ELECTRICAL SHOCK HAZARDS, WHEN SERVICING IF IS ESSENTIAL THAT ONLY MANUFATURES SPECFIED PARTS BE USED FOR THE CRITICAL COMPONENTS IN THE ⚠ SYMBOL MARK OF THE SCHEMETIC.

SECRET
LGElectronics

LG ELECTRONICS

MODEL	GP2R	DATE	20101023
BLOCK	SIDE_JACK	SHEET	18 /

CI Region

* Option name of this page : CI_SLOT (because of Hong Kong)

CI SLOT

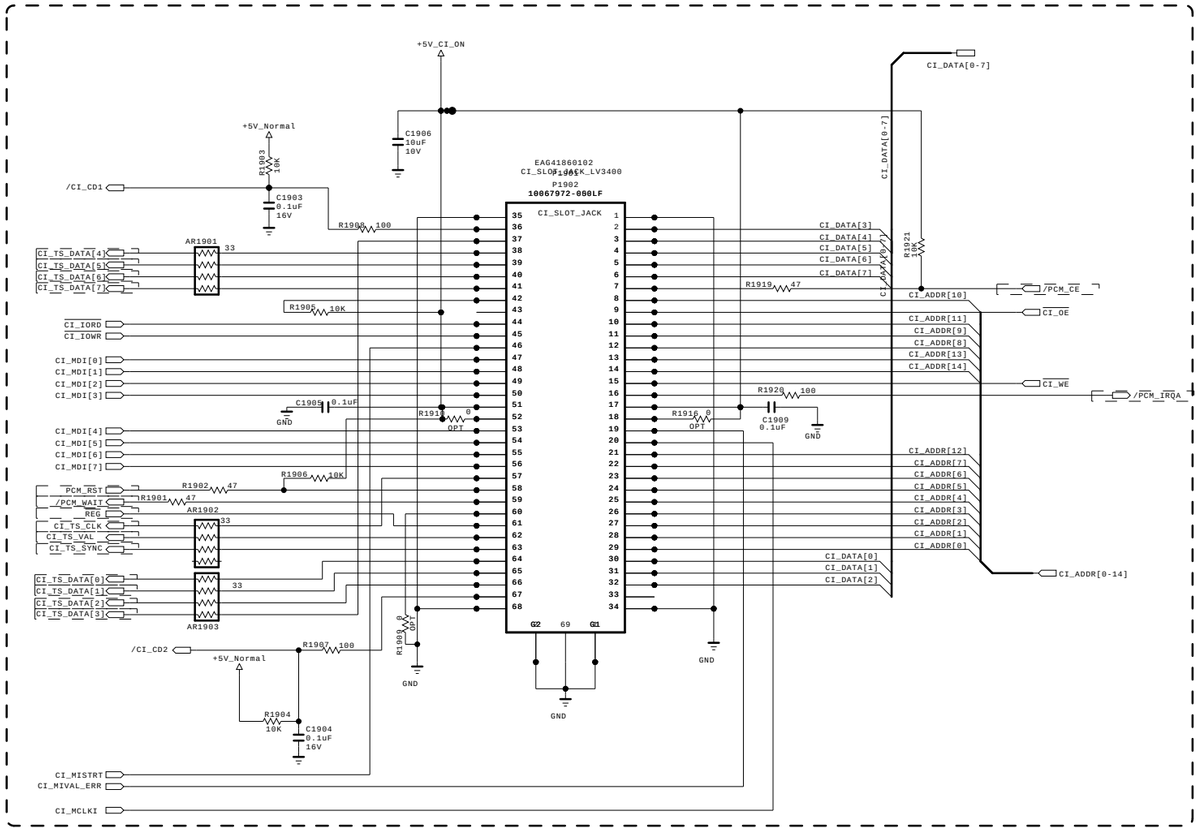

CI TS INPUT

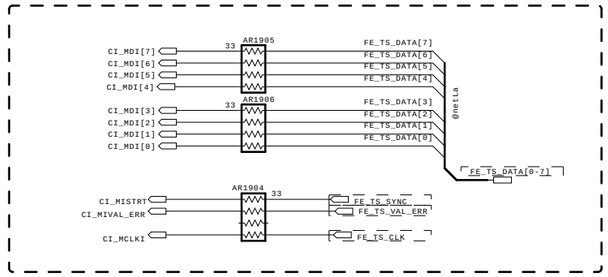

CI HOST I/F

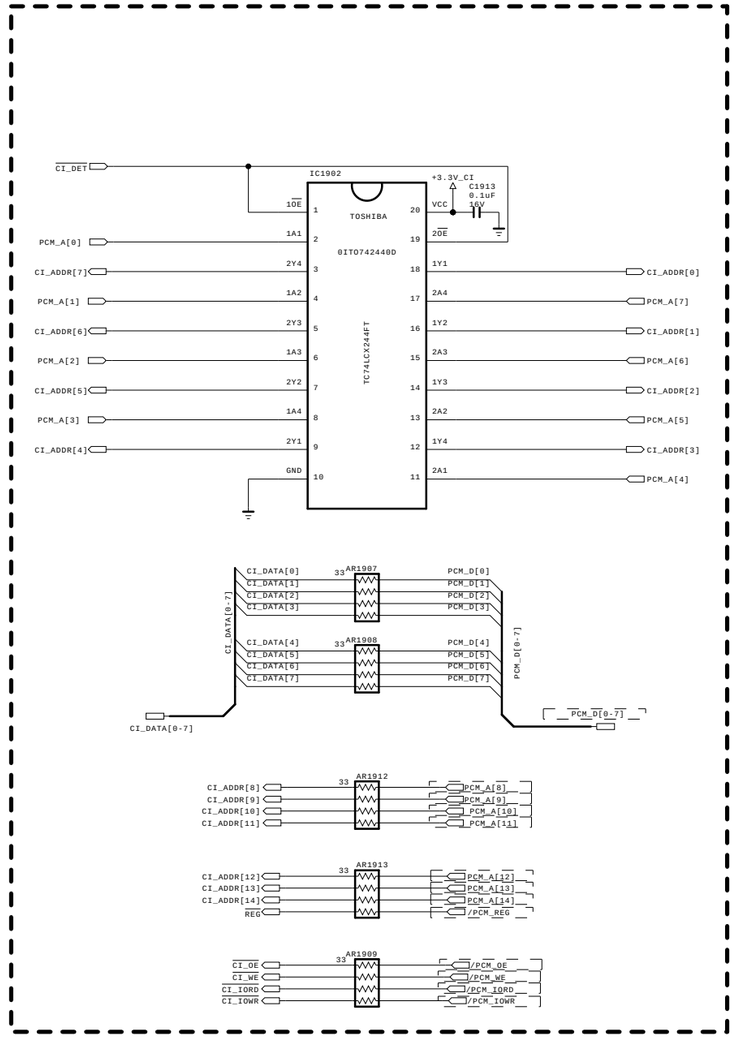

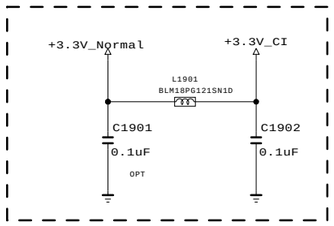

CI DETECT

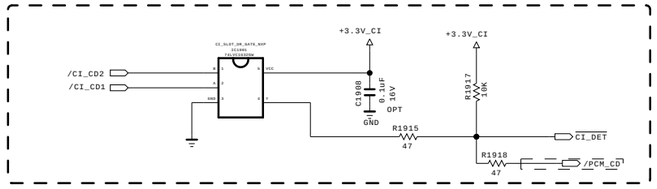

CI POWER ENABLE CONTROL

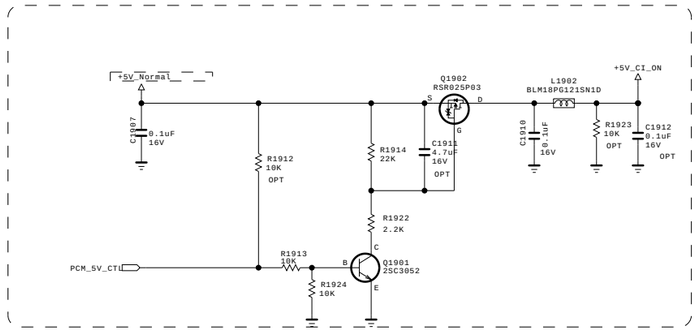

THE ⚠ SYMBOL MARK OF THIS SCHEMETIC DIAGRAM INCORPORATES SPECIAL FEATURES IMPORTANT FOR PROTECTION FROM X-RADIATION. FILRE AND ELECTRICAL SHOCK HAZARDS, WHEN SERVICING IF IS ESSENTIAL THAT ONLY MANUFATURES SPECFIED PARTS BE USED FOR THE CRITICAL COMPONENTS IN THE ⚠ SYMBOL MARK OF THE SCHEMETIC.

SECRET
LGElectronics

LG ELECTRONICS

MODEL	GP2R	DATE	20101023
BLOCK	PCMCI	SHEET	20

SMD GASKET

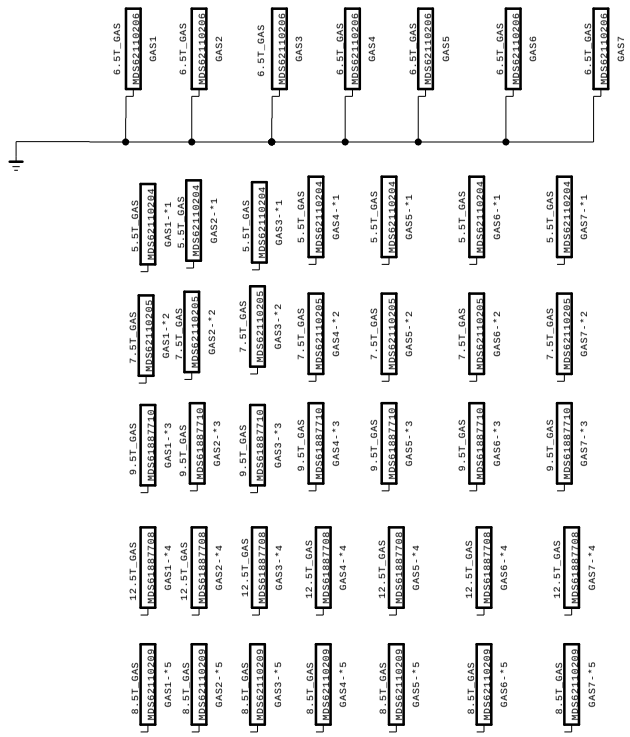

THE ⚠ SYMBOL MARK OF THIS SCHEMETIC DIAGRAM INCORPORATES SPECIAL FEATURES IMPORTANT FOR PROTECTION FROM X-RADIATION. FILRE AND ELECTRICAL SHOCK HAZARDS, WHEN SERVICING IF IS ESSENTIAL THAT ONLY MANUFATURES SPECFIED PARTS BE USED FOR THE CRITICAL COMPONENTS IN THE ⚠ SYMBOL MARK OF THE SCHEMETIC.

SECRET
LGElectronics

LG ELECTRONICS

MODEL	GP2R	DATE	20101023
BLOCK	SMD_GAS	SHEET	20 /

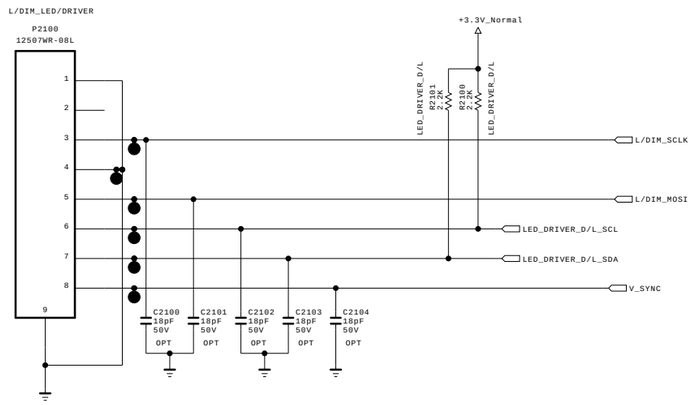

THE ⚠ SYMBOL MARK OF THIS SCHEMETIC DIAGRAM INCORPORATES SPECIAL FEATURES IMPORTANT FOR PROTECTION FROM X-RADIATION. FILRE AND ELECTRICAL SHOCK HAZARDS, WHEN SERVICING IF IS ESSENTIAL THAT ONLY MANUFATURES SPECFIED PARTS BE USED FOR THE CRITICAL COMPONENTS IN THE ⚠ SYMBOL MARK OF THE SCHEMETIC.

SECRET

LGElectronics

LG ELECTRONICS

MODEL	GP2R	DATE	20101023
BLOCK	L/DIM_LED	SHEET	21 /